Project

Thermal Power Plant

Project Description

In this project, you will create a steam driven thermal power plant. First, you will create P&ID, plant 3D model, spec file, and pipings and fittings of the plant. Next, you will generate its isometric and orthographic drawings. Finally, you will create and manage the reports of the thermal power plant.

A thermal power plant operates on the basic Rankine cycle. Heat energy obtained by burning coal is converted into electric power with the help of a generator. Before starting with the modeling part, it is better to have understanding of the working of an actual thermal power plant. The stepwise working of a steam driven power plant is given below.

1. In a thermal power plant, the basic purpose is to generate electricity with the help of a generator by running the generator shaft.

2. Generator shaft is run with the help of a turbine. Typically, a multistage steam turbine is used for this purpose. A multistage steam turbine has three units: high pressure turbine, intermediate pressure turbine, and low pressure turbine.

3. In order to run a turbine, you need to subject the inlet of the turbine with high pressure and high temperature steam. This can be done with the help of a boiler. As the steam passes through the blades of the turbine, its temperature and pressure drops towards the outlet. Now, the steam is at low pressure and low temperature. You need to again raise the temperature and pressure to their original state to repeat the process.

4. The first step is to raise the pressure. You can use a compressor for this purpose but compressing of steam is a highly energy utilizing process which will reduce the efficiency of the system. An easy way is to convert the steam into liquid and then boost its pressure. For this purpose, you will introduce a condenser (heat exchanger) unit which sits beneath the low pressure turbine.

5. In the condenser, a stream of cold water flows through the tubes. The steam rejects heat to the cold water and becomes condensed. Now, you can use the pump to increase the pressure of the water. Typically, a multistage centrifugal pump is used for this purpose.

6. The next task is to bring the temperature back to its original state. For this purpose, heat is added at the exit of the pump with the help of a boiler. Thermal power plants generally use the type of a boiler called water tube boiler. Pulverized coal is burnt inside the boiler. The high pressure water ideally flows through an economizer.

7. In the economizer, the water will capture energy from the flue gas. The water flows through a down-comer and then through the water walls where it gets converted into steam. The pure steam is separated at a steam drum.

8. Now the working fluid is back to its original state (high temperature and pressure). This steam can be fed back to the steam turbine and the cycle can be repeated continuously for power production.

9. This power plant working on the basic Rankine cycle will have a very low efficiency (20-25%).

10. You can increase the performance of this system considerably with the help of few techniques.
    Super heating
    Reheating
    Feed water heating

11. In case of super heating, even after converting water into steam, more heat is added to it and with that steam becomes super heated.

12. The higher the temperature of the steam, the more efficient is the cycle. But the turbine material will not withstand the temperature more than 600 degrees. So the super heating is limited to this threshold.

13. The temperature of the steam decreases as it flows along the rows of the turbine blades. Consequently, a great way to increase the efficiency of the power plant is to add more heat after the first turbine stage. This process is known as reheating. This will increase the temperature of the steam again leading to high power output and greater efficiency.

14. The low pressure sides of the turbine are prior to absorb atmospheric air even after providing adequate sealing. The dissolved gases in the atmospheric air will spoil the boiler material over time.

15. To remove these gases, an open feed water heater is introduced. Hot steam from the turbine is mixed into the feed water. Steam bubbles so generated will absorb the dissolved gases. The mixing also preheats the feed water which helps increase the efficiency of the power plant to a greater extent.

16. All these techniques make a power plant to work under an efficiency range of 40-45%.

17. In an actual power plant, the heat addition and heat rejection processes are executed with the help of a cooling tower. The cooling tower supplies the cold liquid at the condenser inlet. The heated up water at the condenser outlet is sprayed in the cooling tower which induces a natural air draft and the sprayed water loses heat. This is how a colder liquid is always provided at the condenser input.

18. At the heat addition side, the burning coal produces many pollutants which can't be released directly into the atmosphere. So, before that the exhaust gases are treated in an electrostatic precipitator.

19. The electrostatic precipitator uses plates with high voltage static electricity to absorb the pollutant particles. Once the exhaust gases are treated, they are released into the atmosphere through a chimney.

After going through the working and the concepts involved in the power plant processes, you can start creating your project in AutoCAD Plant 3D. The following steps are required to complete this project:

1. Start AutoCAD Plant 3D and create a new project
2. Create P&ID of the plant
   - Create a new P&ID drawing
   - Create custom P&ID symbols
   - Place equipment symbols in the drawing sheet
   - Connect the equipment with lines
   - Add valves to the P&ID
   - Validate the drawing
   - Save the drawing
3. Create plant 3D model of the plant
   - Create and place equipment in the drawing
4. Create spec file for the project
   - Add parts to the spec sheet
   - Save the spec file
5. Add and modify nozzles
   - Add nozzles to the turbine and generator unit
   - Add nozzles to the condenser
   - Add and modify nozzles of the cooling tower
   - Modify nozzles of the vertical inline pump
   - Modify nozzles of the centrifugal pump1
   - Add and modify nozzles of the low pressure heater
   - Add nozzles to the deaerator
   - Modify nozzles of the centrifugal pump2
   - Add and modify nozzles of the high pressure heater
   - Add nozzles to the boiler and boiler drum
6. Connect the equipment
7. Add valves
8. Add structures and supports
9. Add ladders and railings
10. Create isometric drawings
    - Create quick isometric drawing for line number 1007
    - Create production isometric drawing for line number 3004
    - Create production isometric drawing for line number 3006
11. Create orthographic drawings
12. Add annotations and dimensions
13. Create reports and manage data
    - Filter and export the data
    - Modify the data
    - Import the data
    - Use Autodesk AutoCAD Plant Report Creator and generate reports

Starting AutoCAD Plant 3D and Creating a New Project

1. Double-click on the **AutoCAD Plant 3D 2021 - English** icon from the desktop of your computer, AutoCAD Plant 3D 2021 starts and the **PROJECT MANAGER** is displayed by default on the left of the screen.

2. In **PROJECT MANAGER**, select the **New Project** option from the drop-down list available in the **Current Project** area; the Project Setup Wizard is displayed.

3. Enter **POWER PLANT** in the **Enter a name for this project** edit box and choose the **Next** button; the **Specify unit settings** page is displayed.

4. Select the **Imperial** radio button, if not selected by default and then choose the **Next** button; the **Specify P&ID settings** page is displayed.

5. Select the **PIP** option from the **Select the P&ID symbology standard to be used** list box, if not selected by default and choose the **Next** button; the **Specify Plant 3D directory settings** page is displayed.

6. Accept the default directory settings and choose the **Next** button; the **Specify database settings** page is displayed.

7. Make sure the **Single User - SQLite local database** radio button is selected and choose the **Next** button; the **Finish** page is displayed.

8. Choose the **Finish** button; you will notice that the **POWER PLANT** project is displayed in the drop-down list available in the **Current Project** area of the **PROJECT MANAGER**. Also, a node named **POWER PLANT** is created in the **Project** area.

Creating P&ID of the Plant

In this section, you will be working with the P&ID of the thermal power plant.

Creating a New P&ID Drawing

1. In the **PROJECT MANAGER**, right-click on the **P&ID Drawings** node in the project tree and then choose the **New Drawing** option; the **New DWG** dialog box is displayed.

2. Enter **P&ID.dwg** in the **File name** edit box and then specify the **PID ANSI D -Color Dependent Plot Styles.dwt** template in the **DWG template** edit box.

3. Choose the **OK** button from the **New DWG** dialog box; the new P&ID drawing file is created with the **TOOL PALETTES** displayed on the right side of the screen.

4. Choose the **Workspace Switching** button on the right-side of the Status Bar; a flyout is displayed. Choose the **PID PIP** option from the flyout; the **P&ID PIP** workspace is invoked and the **TOOL PALETTES** is loaded with the P&ID symbols.

To create the P&ID of the Power Plant, firstly we need to have the list of equipments we are going to use in the plant. The list of equipments is given below.

1. Turbine and Generator Unit
2. Condenser Unit
3. Centrifugal and Inline Pumps
4. LP Heater
5. HP Heater

6. Deaerator
7. Boiler Unit
8. Cooling Tower

Creating Custom P&ID Symbols

You can create custom P&ID symbols of the equipment and add them to the **TOOL PALETTES**. In this project, you need to create custom P&ID symbols for all the equipment except centrifugal pumps. First, you will create a P&ID symbol for the Turbine and Generator unit and then add it to the **TOOL PALETTES**. The stepwise procedure to do so is given next.

1. Create a symbol of the Turbine and Generator unit, as shown in Figure P-1, using the AutoCAD sketching tools.

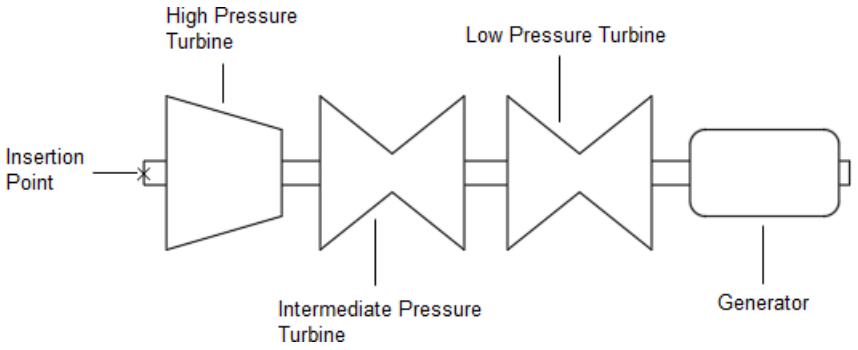

Figure P-1 *Symbol of the Turbine and the Generator Unit*



Note

Assume the dimensions while creating the symbols. You can scale the symbols after inserting them in the drawing sheet as per the requirement.

2. Convert the symbol created into a block named **STEAM TURBINE** and save the drawing. For the insertion point of the block, refer to Figure P-1.

3. Click on the **Equipment** tab in the **TOOL PALETTES - P&ID PIP**. This ensures that the custom symbol will be added to the **Equipment** tab of the **TOOL PALETTES**.

4. Invoke the **Project Setup** dialog box by choosing the **Project Setup** tool from the **Project Manager** drop-down in the **Project** panel of the **Home** tab.

5. In the **Project Setup** dialog box, expand the **P&ID DWG Settings** node by clicking on the + sign. Next, choose **P&ID Class Definitions** > **Engineering Items** > **Equipment**.

6. Click on the **Mechanical Drivers** sub-node; it is highlighted. Next, right-click to display a shortcut menu and choose the **New** option; the **Create Class** dialog box is displayed, refer to Figure P-2.

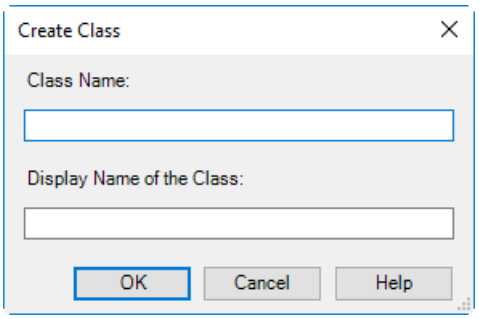

Figure P-2 *The* ***Create Class*** *dialog box*

7. Enter **STEAMTURBINE** in the **Class Name** edit box; the specified name also gets displayed as **STEAMTURBINE** in the **Display Name of the Class** edit box. Next, enter a space after **STEAM** in the **Display Name of the Class** edit box so that the name is displayed as **STEAM TURBINE**. (Note that the class name entered in the **Class Name** edit box should not have any spaces in between the alphabets). Next, choose the **OK** button to exit the dialog box; the specified class name gets listed and highlighted under the **Mechanical Drivers** sub-node. Also, the class name (**STEAM TURBINE**) is displayed next to the **Class settings** area.

8. Choose the **Add Symbols** button from the **Symbol** area; the **Add Symbols - Select Symbols** dialog box will be displayed, refer to Figure P-3.

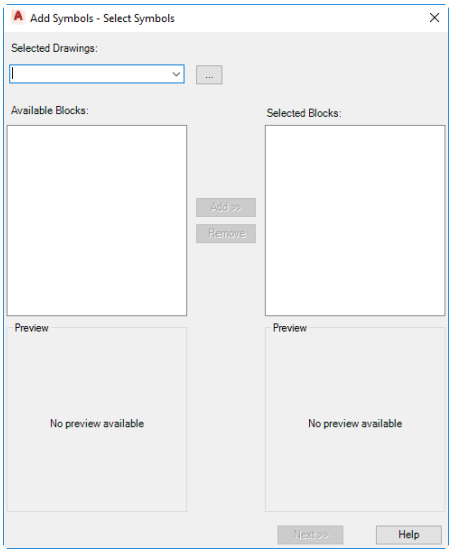

Figure P-3 *The* ***Add Symbols - Select Symbols*** *dialog box*

9. In this dialog box, choose the browse button next to the drop-down list in the **Selected Drawings** area; the **Select Block Drawing** dialog box is displayed. In this dialog box, browse to the file location and open it; the **Add Symbols - Select Symbols** dialog box is displayed again with a list of blocks in the drawing file in the **Available Blocks** list box.

10. Select **STEAM TURBINE** from the **Available Blocks** list box; it is highlighted. Also a preview of the turbine block is displayed in the **Preview** window available below the **Available Blocks** list box.

11. Choose the **Add** button; the block name is displayed in the **Selected Blocks** list box of the dialog box. Choose the **Next** button; the **Add Symbols - Edit Symbol Settings** dialog box is displayed.

12. Enter **STEAM TURBINE** in the **Symbol Name** edit box of the **Symbol Properties** area. Choose the **Yes** option from the **Auto Nozzle** drop-down list and **Flanged Nozzle Style** from the **Auto Nozzle Style** drop-down list of the **Other Properties** area. Next, choose the **Finish** button to exit the **Add Symbols - Edit Symbol Settings** dialog box; the **Project Setup** dialog box is displayed again.

13. Choose the **Add to Tool Palette** button from the **Project Setup** dialog box; the **Create Tool** message box is displayed with a message **'STEAM TURBINE' tool has been added to the current tool palette**. Choose the **OK** button to exit the message box.

14. Choose the **Apply** and then the **OK** button to exit the **Project Setup** dialog box; the **STEAM TURBINE** symbol is added to the **Equipment** tab.

15. Follow the above discussed procedure to add other equipment symbols to the **TOOL PALETTES**. Refer to Figure P-4 for the shapes of the remaining equipment symbols which are to be added to the **TOOL PALETTES**.

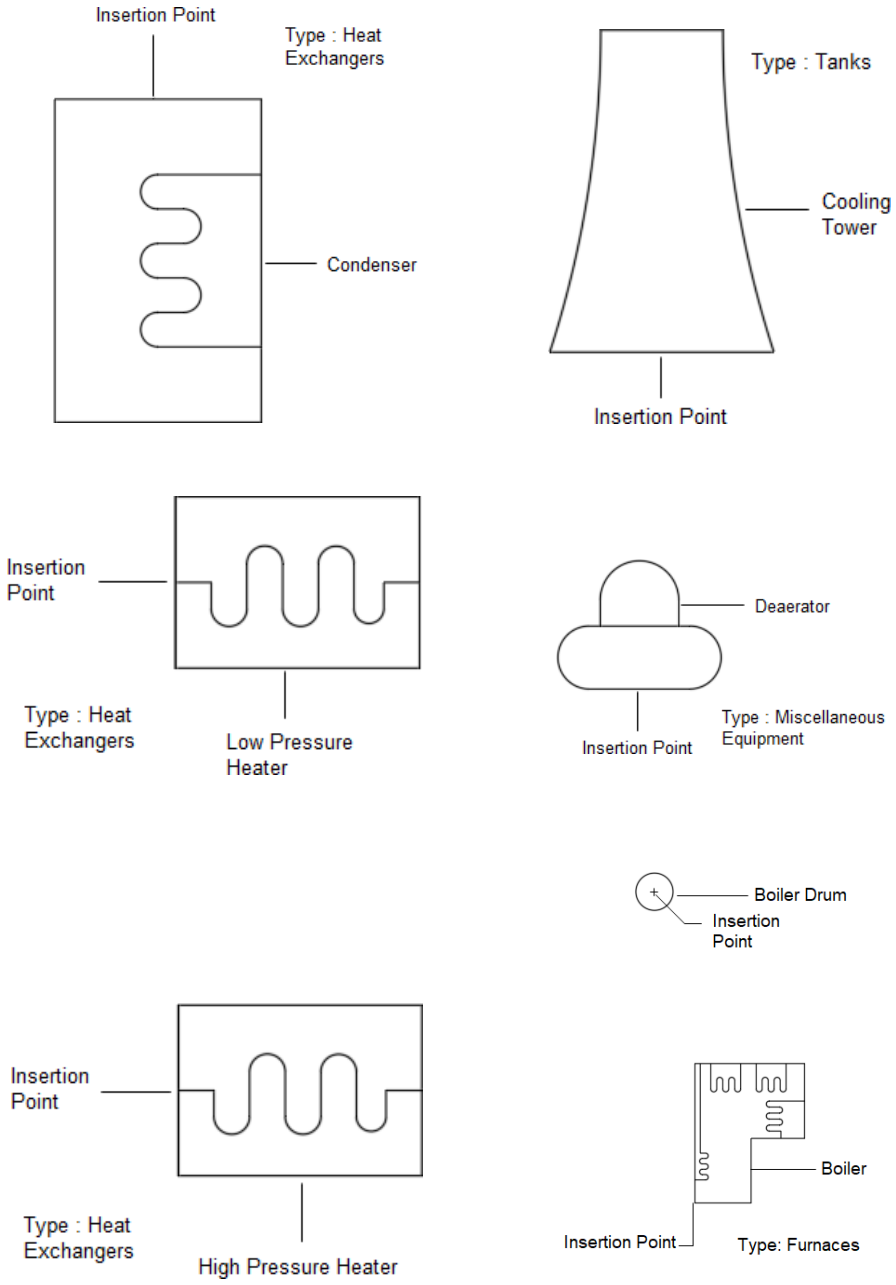

Figure P-4 *The Shapes of the symbols to be added to the* ***TOOL PALETTES***

Placing Equipment Symbols in the Drawing Sheet

After adding all the equipment symbols to the **TOOL PALETTES**, now you can start inserting them into the drawing sheet. Figure P-5 shows the final P&ID of the Power Plant (For your reference). The stepwise procedure to add equipment symbols to the drawing sheet is given next.

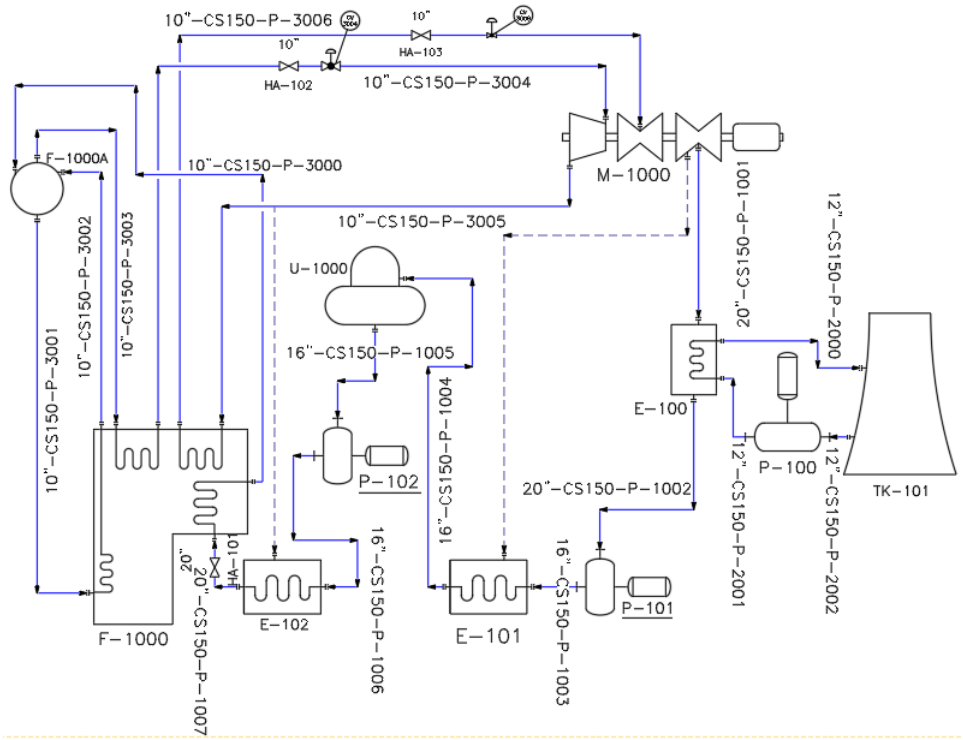

Figure P-5 *P&ID of the Plant*

1. Choose the **Equipment** tab from the **TOOL PALETTES** if not already chosen.

2. Choose the **STEAM TURBINE** tool from the **Drivers and Agitator/Mixer** area in the Equipment tab of the **TOOL PALETTES - P&ID PIP**; you are prompted to specify an insertion point. Next, specify **(15,16)** as the insertion point of the turbine and press ENTER; the **STEAM TURBINE** is placed at the specified location in the drawing sheet.

Note

You can scale the equipment symbols after inserting them into the P&ID for better visualisation. Make sure while scaling the equipment symbols, you choose their insertion points as the base points.

3. Select the **STEAM TURBINE** from the drawing sheet and right-click; a shortcut menu is displayed. Choose **Annotate > Tag** from the shortcut menu; the tag gets attached to the cursor and you are prompted to specify an annotation position. Drag the cursor and place the annotation tag below the turbine; **M-?** gets displayed on the screen. Next, double-click on the annotation tag; the **Edit Annotation** dialog box is displayed, refer to Figure P-6.

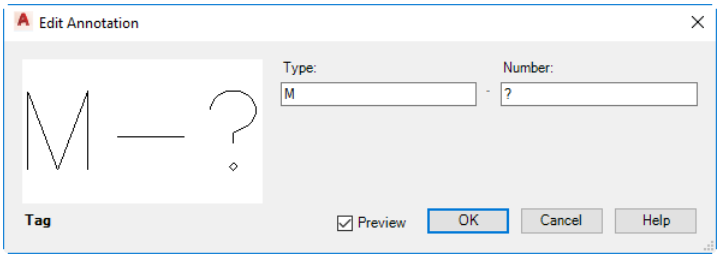

Figure P-6 *The* ***Edit Annotation*** *dialog box*

4. In the **Edit Annotation** dialog box, enter **1000** in the **Number** edit box and then choose the **OK** button; the annotation tag **M-?** gets displayed as **M-1000**, refer to Figure P-5.

5. Choose the **CONDENSER** tool from the **Drivers and Agitator/Mixer** area of the **Equipment** tab; you are prompted to specify the insertion point. Next, specify **(18.5,11)** as the insertion point of the Condenser and press ENTER. The Condenser gets placed at the specified location in the drawing sheet.

6. Follow the procedure discussed above and assign annotation tag **E-100** to the Condenser.

7. Similarly, place other equipment symbols into the drawing sheet and assign annotation tags to them. Table given below shows the equipment names, insertion coordinates, and annotation tags to be assigned to the remaining equipment symbols which are to be added to the drawing sheet.

EQUIPMENT	INSERTION COORDINATES	ANNOTATION TAGS
Cooling Tower	**(24,7)**	**TK-101**
Vertical Inline Pump (Between Line numbers 2001 and 2002)	**(21,8)**	**P-100**
Horizontal Centrifugal Pump1 (Between Line numbers 1002 and 1003)	**(16,4)**	**P-101**
Low Pressure Heater	**(12,4)**	**E-101**
Deaerator	**(10,11)**	**U-1000**
Horizontal Centrifugal Pump2 (Between Line numbers 1005 and 1006)	**(10,7.5)**	**P-102**
High Pressure Heater	**(6.5,4)**	**E-102**
Boiler	**(2.5,3)**	**F-1000**
Boiler Drum	**(0.9858,14.6250)**	**F-1000A**



Note

The equipment symbols should be placed in the drawing sheet in the same sequence as given in the table.

Connecting the Equipments with lines

1. Choose the **Lines** tab in the **TOOL PALETTES - P&ID PIP**, and then choose the **Primary Line Segment** tool from the **Pipe Lines** area; you are prompted to specify the start point. Specify the start point at the bottom of the Low Pressure Turbine and connect it to the top of the Condenser, refer to Figure P-5. You will notice that the nozzles are added at the start and end points of the line that lies at the bottom of the Low Pressure Turbine and top of the Condenser.

2. Select the previously created line and right-click; a shortcut menu is displayed. Choose the **Assign Tag** option from the shortcut menu; the **Assign Tag** dialog box is displayed.

3. In the **Assign Tag** dialog box, select **20”** from the **Size** drop-down list, **CS150 - 150#Carbon Steel** from the Spec drop-down list, **P - GENERAL PROCESS** from the **Pipe Line Group Service** drop-down list, and enter **1001** in the **Pipe Line Group Line Number** edit box. Next, select the **Place annotation after assigning tag** check box from the **Existing Pipe Line Segments area** and then choose the **Assign** button; you are prompted to select an annotation position. Drag the cursor and place the annotation at the suitable location, refer to Figure P-5.

4. Again, choose the **Primary Line Segment** tool from the **Pipe Lines** area of the **Lines** tab and connect the bottom nozzle of the Condenser to the top nozzle of the Centrifugal Pump1 and assign it the tag **20”- CS150-P-1002**, refer to Figure P-5.

5. Invoke the **Primary Line Segment** tool and connect the left nozzle of the Centrifugal Pump1 and right nozzle of the Low Pressure Heater tagged **E-101** and assign it the tag **16”- CS150-P-1003**, refer to Figure P-5.

6. Similarly, connect the other equipment using the **Primary Line Segment** tool, refer to Figure P-5. Table given below shows the details of the equipment to be connected and the tags to be assigned to the lines connecting them and Figure P-7 shows the Boiler with its labeled components for your reference.

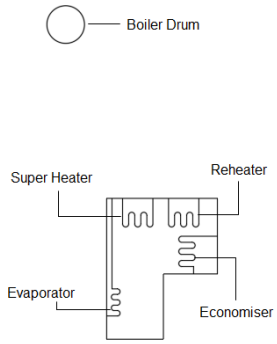

Figure P-7 *Boiler with its labelled components*

EQUIPMENTS TO BE CONNECTED	TAG
Left of LP Heater and right of Deaerator	**16”-CS150-P-1004**
Bottom of Deaerator and top nozzle of Centrifugal Pump2	**16”-CS150-P-1005**
Left nozzle of Centrifugal Pump2 and right of HP Heater tagged E-102	**16”-CS150-P-1006**
Left of HP Heater and bottom of Boiler (Economiser)	**20”-CS150-P-1007**
Top right of Condenser and top of Cooling Tower	**12”-CS150-P-2000**
Bottom of Cooling Tower and inlet nozzle of Vertical Inline Pump	**12”-CS150-P-2002**
Outlet nozzle of Vertical Inline Pump and bottom right of Condenser	**12”-CS150-P-2001**
Top right of Economiser and top left of Boiler Drum	**10”-CS150-P-3000**
Bottom of Boiler Drum and bottom left of Evaporator	**10”-CS150-P-3001**
Top of Evaporator and right of Boiler Drum	**10”-CS150-P-3002**
Top of Boiler Drum and left of Super Heater	**10”-CS150-P-3003**
Right of Super Heater and top of High Pressure Turbine	**10”-CS150-P-3004**
Bottom of High Pressure Turbine and right of Reheater	**10”-CS150-P-3005**
Left of Reheater and top of Intermediate Pressure Turbine	**10”-CS150-P-3006**

7. Choose the **Primary Line Segment-Existing** tool from the **Pipe Lines** area of the **Lines** tab and connect the bottom left of the Low Pressure Turbine and the top of the Low Pressure Heater, refer to Figure P-5.

8. Again, choose the **Primary Line Segment-Existing** tool and connect the line tagged **10"-CS150-P-3005** to the top of the High Pressure Heater, refer to Figure P-5.

Adding Valves to the P&ID

1. Select the Valves tab in the **TOOL PALETTES - P&ID PIP**; the **Control Valve** and **Valves** areas is displayed in the **TOOL PALETTES**.

2. Choose the **Gate Valve** tool from the **Valves** area; you are prompted to specify an insertion point. Place the valve on the line tagged **20"-CS150-P-1007** at the location shown in Figure P-5.

3. Similarly, place the Gate Valves on the lines tagged **10"-CS150-P-3004** and **10"-CS150-P-3006** at the locations shown in Figure P-5.

4. Choose the **Control Valve** tool from the **Control Valve** area; you are prompted as **pick insertion point or [Change body or actuator]**. Choose the **Change body or actuator** option from the command prompt; the **Control Valve Browser** dialog box is displayed. Select **Globe Valve** from the **Select Control Valve Body** list box and **Diaphragm Actuator** from the **Select Control Valve Actuator** list box and then choose the **OK** button. Next, place the valve on the line tagged **10"-CS150-P-3004** at the location shown in Figure P-5; you are prompted to select an annotation position. Drag the cursor and click on the suitable location where you want to place the tag; the **Assign Tag** dialog box is displayed. Enter **3004** in the **Loop Number** edit box and choose the **Assign** button; the tag is attached to the cursor. Place the tag at the location, as shown in Figure P-5.

5. Similarly, place another Control Valve on the line tagged **10"-CS150-P-3006** and assign tag **CV-3006** to it.

After adding all the equipment, pipings, and fittings, the P&ID should look similar to the one shown in Figure P-5.

Validating the Drawing

1. Choose the **Validate Config** button from the **Validate** panel in the **Home** tab; the **P&ID Validation Settings** dialog box is displayed.

2. In this dialog box, expand the **P&ID objects** node and clear the **Unresolved off-page connectors** check box. Similarly, expand the **3D Model to P&ID checks** node and clear all the check boxes under it. Next, choose the **OK** button to close the dialog box.

3. Run validation process by choosing the **Run Validation** tool from the **Validate** panel; the **VALIDATION SUMMARY** palette is displayed with a tree list of errors in the drawing.

4. Right-click on any error in the **VALIDATION SUMMARY** palette and choose Ignore to ignore the error. Similarly, ignore all the errors and exit the **VALIDATION SUMMARY** palette.

Saving the Drawing

1. Choose the **Save** option from the **Application Menu** or choose **File > Save** in the menu bar to save the drawing file.

2. Choose **Close > Current Drawing** from the **Application Menu** to close the drawing file.

CREATING PLANT 3D MODEL OF THE PLANT

After creating the P&ID, you need to create a 3D model of the plant. To do so, you need to create a new Plant 3D drawing. In the **PROJECT MANAGER**, select the **Plant 3D Drawings** node and right-click; a shortcut menu is displayed. Next, choose the **New Drawing** option from the shortcut menu; the **New DWG** dialog box gets displayed. Enter **P3D** in the **File name** edit box and then choose the **OK** button; a new file **P3D** gets created and displayed under the **Plant 3D Drawings** node.

Next, click on the **Workspace Switching** button in the Status Bar; a flyout gets displayed. Choose the **3D Piping** option from the flyout; the 3D Piping environment gets invoked and the **TOOL PALETTES - AUTOCAD PLANT 3D - PIPING COMPONENTS** gets loaded with 3D piping components.

Creating and Placing Equipments in the Drawing

Now, you need to create and place the equipment in the drawing. After creating the P&ID of the plant, you have a clear understanding of the equipment to be used in the plant. A list of equipment to be used in the plant is given below for your reference.

1. Turbine and Generator unit
2. Condenser
3. Vertical Inline Pump
4. Cooling Tower
5. Centrifugal Pump1
6. Low Pressure Heater
7. Deaerator
8. Centrifugal Pump2
9. High Pressure Heater
10. Boiler
11. Boiler Drum



Note

*While inserting the equipment in the drawing area, make sure that the **Dynamic Input** is turned off and **UCS** is set to **World**.*

Turbine and Generator unit

First, you will create the Turbine and Generator unit and place it in the drawing. To do so, choose the **Create Equipment** tool from the **Equipment** panel of the **Home** tab; the **Create Equipment** dialog box is displayed. Select the **Mechanical Drivers > New Horizontal Mechanical Drivers** from the Equipment drop-down list. Next, select the **Equipment** tab in the dialog box if it is not already selected.

Next, click on the **Add Shape** button; a flyout is displayed. Choose the **Cylinder** option from the flyout; it is listed in the **Shapes** list box. Select the **Cylinder** from the **Shapes** list box; its default dimensions are displayed in the **Dimensions** area. Next, enter **1'** and **2'** in the **D** and **H** edit boxes, respectively. Click in the **D** edit box; a swatch is displayed on the right. Click on the swatch; a flyout is displayed. Next, choose the **Override mode** option from the flyout.



Note

*After entering the values in the various edit boxes in the **Dimensions** area of the **Create Equipment** dialog box, make sure that you choose the **Override mode** option in each edit box wherever it is available.*

Again, choose the **Add Shape** button from the **Create Equipment** dialog box and choose the **Pyramid** option from the flyout; it is added to the **Shapes** list box. Select the **Pyramid** from the **Shapes** list box; its default dimensions are listed in the **Dimensions** area. Next, enter **5'**, **3'**, **5'**, and **6'** in the **D1**, **D2**, **W**, and **H** edit boxes, respectively. Make sure that the **Downwards** option is selected from the **Orientation** drop-down list of the **Dimensions** area.

Next, follow the same procedure to add the shapes to the **Shapes** list box. Figure P-8 shows the **Create Equipment** dialog box with list of shapes which are required to create the Turbine and Generator unit.

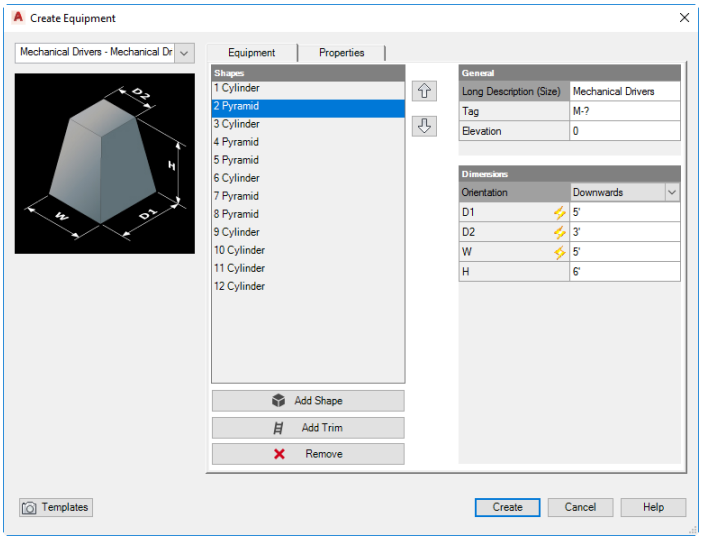

***Figure P-8** The **Create Equipment** dialog box with list of Shapes*

Next, select the cylinder numbered 3 in the Shapes list box and change its dimensions to:
D = 1' **H = 2'**

Similarly, for all other shapes, specify the dimension values as given below.

For Pyramid numbered 4
D1 = 7' **D2 = 3'**
W = 5' **H = 5'**
Orientation : Downwards

For Pyramid numbered 5
D1 = 7' **D2 = 3'**
W = 5' **H = 5'**
Orientation : Upwards

For Cylinder numbered 6
D = 1' **H = 2'**

For Pyramid numbered 7
D1 = 8' **D2 = 3'**
W = 5' **H = 5'**
Orientation : Downwards

For Pyramid numbered 8
D1 = 8' **D2 = 3'**
W = 5' **H = 5'**
Orientation : Upwards

For Cylinder numbered 9
D = 1' **H = 4'**

For Cylinder numbered 10
D = 2' **H = 6"**

For Cylinder numbered 11
D = 8' **H = 6'**

For Cylinder numbered 12
D = 2' **H = 6"**

After specifying dimension values for all the shapes, click in the **Tag** edit box in the **General** area, refer to Figure P-8; the **Assign Tag** dialog box is displayed. Enter **1000** in the **Number** edit box and choose the **Assign** button to exit the **Assign Tag** dialog box. You can also assign tag to the equipment using the **PROPERTIES** palette. Next, choose the **Create** button from the **Create Equipment** dialog box; you are prompted to choose an insertion point. Specify the insertion point as **54',-134',7'5"** at the command prompt; the compass tool is displayed at the bottom of the equipment. Set the orientation of the turbine and generator unit to 0 degrees; it is placed at the specified point.

Condenser (Heat Exchanger unit)

Now, you need to create the Heat Exchanger unit which is a vertical Condenser in our case. To do so, choose the **Create Equipment** tool from the **Equipment** panel of the **Home** tab; the **Create Equipment** dialog box is displayed. Next, select the **Heat Exchanger > New Vertical Heat Exchanger** from the Equipment drop-down list. Select the **Equipment** tab in the dialog box if not already selected. Next, follow the same procedure explained before to add shapes to the **Shapes** list box. Refer to Figure P-9 for the list of shapes which are to be added to the **Shapes** list box to create the Condenser unit.

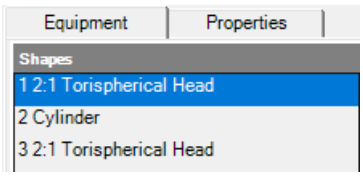

Figure P-9 *The list of shapes to be added to the* ***Shapes*** *area*

Next, select the shapes listed in the **Shapes** area one by one and assign dimension values to them. The dimension values for each shape is given below.

For 2:1 Torispherical Head numbered 1
D = 10' SF = 0 T = 1"

For Cylinder numbered 2
D = 10' H = 12'

For 2:1 Torispherical Head numbered 3
D = 10' SF = 0 T = 1"

After specifying dimension values for all the shapes, click in the **Tag** edit box in the **General** area; the **Assign Tag** dialog box is displayed. Enter **100** in the **Number** edit box and choose the **Assign** button to exit the **Assign Tag** dialog box. Next, choose the **Create** button from the **Create Equipment** dialog box; you are prompted to choose an insertion point. Specify the insertion point as **70',-134',-44'** at the command prompt; the compass tool is displayed at the bottom of the equipment. Set the orientation of the Condenser unit to **90** degrees; it is placed at the specified point.

Follow the same procedure to create and place rest of the equipment. The shapes to be added, the dimension values and the tags to be assigned to each equipment are given next.

Cooling Tower

Select the **Tank > Vertical Tank** from the Equipment drop-down list. Refer to Figure P-10 for the shapes to be added, dimension values, and tag to be assigned.

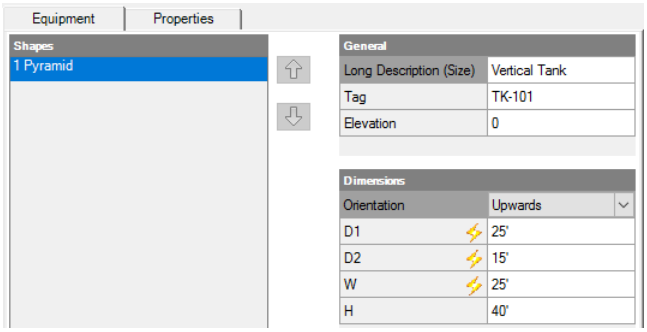

Figure P-10 *The shapes to be added, dimension values, and tag to be assigned to the COOLING TOWER*

Insertion point : **5', -134', -45'**
Compass Orientation : **0 degrees**

Vertical Inline Pump

Select the **Pump > Vertical Inline Pump** from the Equipment drop-down list. Refer to Figure P-11 for the dimension values and tag to be assigned.

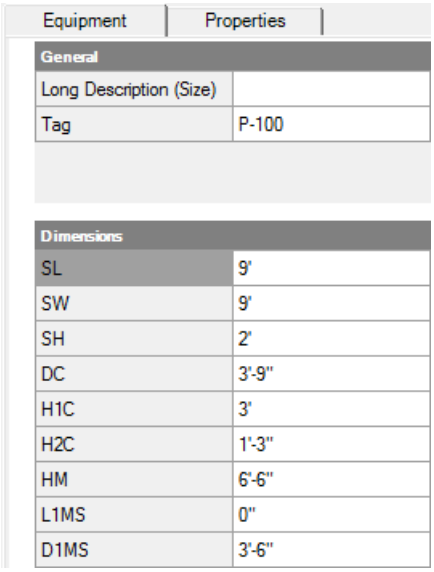

Figure P-11 *The dimension values and the tag to be assigned to the VERTICAL INLINE PUMP*

Insertion point : **40', -134', -40'**
Compass Orientation : **0 degrees**

Centrifugal Pump1

Select the **Pump > Centrifugal Pump** from the Equipment drop-down list. Refer to Figure P-12 for the dimension values and tag to be assigned.

Equipment | Properties

General	
Long Description (Size)	Centrifugal Pump
Tag	P-101

Dimensions	
SL	16'
SB	6'
SH	6"
SI	2'
SO	4'
HC	6'
DC	4'
L1BB	3'-4"
D1BB	1'-6"
D2BB	1'-6"
L2BB	2'-6"
D1MS	2'-4"
L1MS	0"
LMS	6'
D2MS	2"

Figure P-12 *The dimension values and the tag to be assigned to the CENTRIFUGAL PUMP**1***

Insertion point : **99', -134', -64'**
Compass Orientation : **0 degrees**

Low pressure heater

Select the **Heater > Box Type Heater** from the Equipment drop-down list. Refer to Figure P-13 for shapes to be added and tag to be assigned.

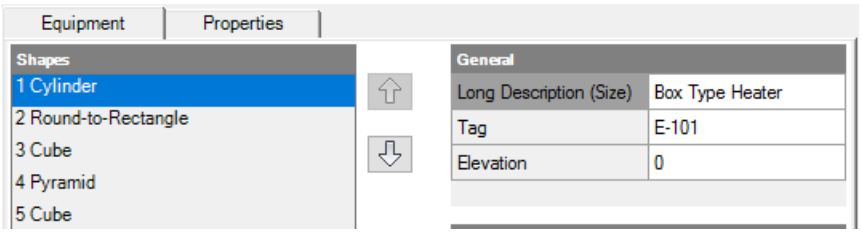

Figure P-13 *The shapes to be added and the tag to be assigned to the LOW PRESSURE HEATER*

The dimension values to be assigned to the shapes listed in the **Shapes** area are given next, refer to Figure P-13.

For Cylinder numbered 1
D = 2'-6" H = 12'-11"

For Round-to-Rectangle numbered 2
D1 = 5'-5" W = 5'-5" H = 2'-11"
D2 = 2'-6" E = 0" A = 0
Orientation : Upwards

For Cube numbered 3
D = 5'-5" W = 5'-5" H = 4'-7"

For Pyramid numbered 4
D1 = 12'-11" D2 = 5'-5"
W = 12'-11" H = 2'-11"
Orientation : Upwards

For Cube numbered 5
D = 12'-11" W = 12'-11" H = 16'-3"

Insertion point : **117', -173', -64'**
Compass Orientation : **180 degrees**

Deaerator

Select the **Misc Equipment > New Vertical Misc Equipment** from the Equipment drop-down list. Refer to Figure P-14 for shapes to be added and tag to be assigned.



Figure P-14 *The shapes to be added and the tag to be assigned to the DEAERATOR*

The dimension values to be assigned to the various shapes listed in the **Shapes** area are given next.

For 2:1 Torispherical Head numbered 1
D = 10' SF = 5' T = 1'

For Cylinder numbered 2
D = 15' H = 8'

Insertion point : **117', -203', -15'**
Compass Orientation : **0 degrees**

Centrifugal Pump2

Select the **Pump > Centrifugal Pump** from the Equipment drop-down list. Refer to Figure P-15 for the dimension values and tag to be assigned.

Equipment | Properties

General	
Long Description (Size)	Centrifugal Pump
Tag	P-102

Dimensions	
SL	16'
SB	6'
SH	6"
SI	2'
SO	4'
HC	6'
DC	4'
L1BB	3'-4"
D1BB	1'-6"
D2BB	1'-6"
L2BB	2'-6"
D1MS	2'-4"
L1MS	0"
LMS	6'
D2MS	2"

Figure P-15 *The dimension values and the tag to be assigned to the CENTRIFUGAL PUMP2*

Insertion point : **69', -203', -64'**
Compass Orientation : **180 degrees**

High Pressure Heater

Select the **Heater > Box Type Heater** from the Equipment drop-down list. Refer to Figure P-16 for shapes to be added and tag to be assigned.

Equipment | Properties

Shapes
1 Cylinder
2 Round-to-Rectangle
3 Cube
4 Pyramid
5 Cube

General	
Long Description (Size)	Box Type Heater
Tag	E-102
Elevation	0

Figure P-16 *The shapes to be added and the tag to be assigned to the HIGH PRESSURE HEATER*

The dimension values to be assigned to the various shapes listed in the **Shapes** area are given next.

For Cylinder numbered 1
D = 2'-11" H = 13'-4"

For Round-to-Rectangle numbered 2
D1 = 5'-10" W = 5'-10" H = 3'-4"
D2 = 2'-11" E = 0" A = 0
Orientation : Upwards

For Cube numbered 3
D = 5'-10" W = 5'-10" H = 5'

For Pyramid numbered 4
D1 = 13'-4" D2 = 5'-10"
W = 13'-4" H = 3'-4"
Orientation : Upwards

For Cube numbered 5
D = 13'-4" W = 13'-4" H = 16'-8"

Insertion point : **33', -203', -64'**
Compass Orientation : **0 degrees**

Boiler

You need a Water Tube Boiler in the plant. So you will create a custom shape for the Boiler and then convert it into the Plant 3D component. Figure P-17 shows the dimensions which are required to create the Boiler.

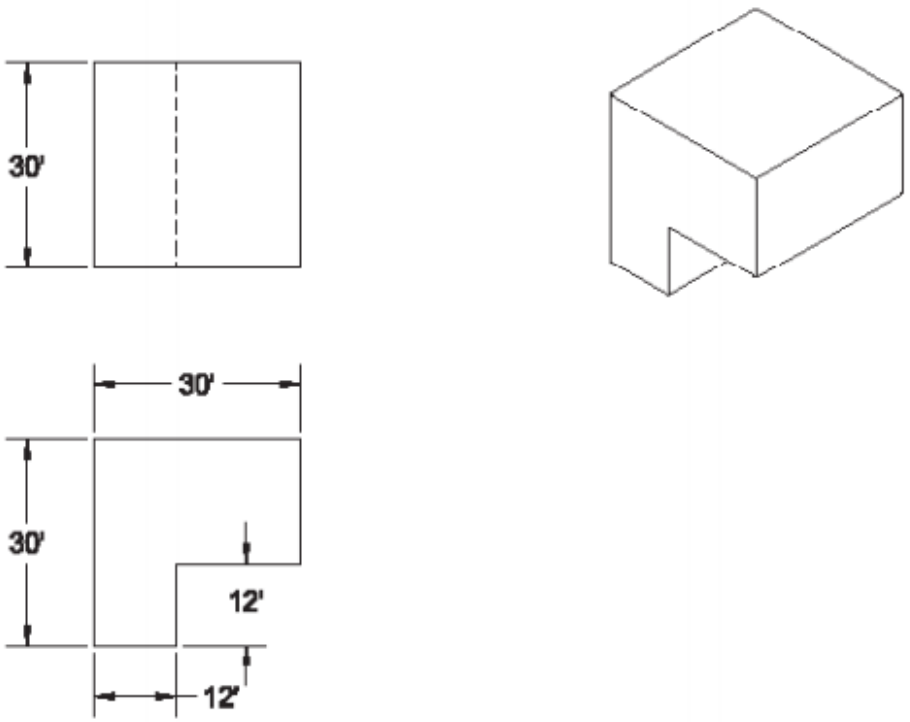

Figure P-17 *Views and dimensions of the Boiler*

Create a 3D model of the boiler, refer to Figure P-17 for dimensions. After creating the 3D model, you need to convert it into a Plant 3D equipment. To do so, choose the **Convert Equipment** tool from the **Equipment** panel of the **Home** tab; you are prompted to select AutoCAD objects to convert. Select the 3D model created and press ENTER; the **Convert to Equipment** dialog box is displayed. Select **Furnace** from the **Select equipment type** list box and then choose the **Select** button; you are prompted to specify the insertion base point. Specify the bottom left vertex of the Boiler as the insertion point, refer to Figure P-18; the **Modify Equipment** dialog box is displayed. Enter **Boiler** in the **Long Description (Size)** edit box. Next, click in the **Tag** edit box; the **Assign Tag** dialog box is displayed. Enter **1000** in the **Number** edit box and then choose the **Assign** button. Next, choose the **Apply** and then the **OK** button. The 3D model is converted into Plant 3D equipment.

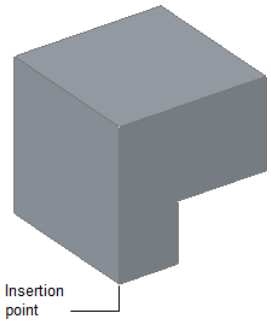

Figure P-18 *3D model of the Boiler with insertion point*

Next, we need to place the Boiler at the required location. Move the Boiler using the insertion point as the base point and palce it at **(-46', -196', -64')**.

Boiler Drum

Select the **Furnace > New Vertical Furnace** from the Equipment drop-down list. Refer to Figure P-19 for shapes to be added, tag, and dimensions to be assigned to the Boiler Drum.

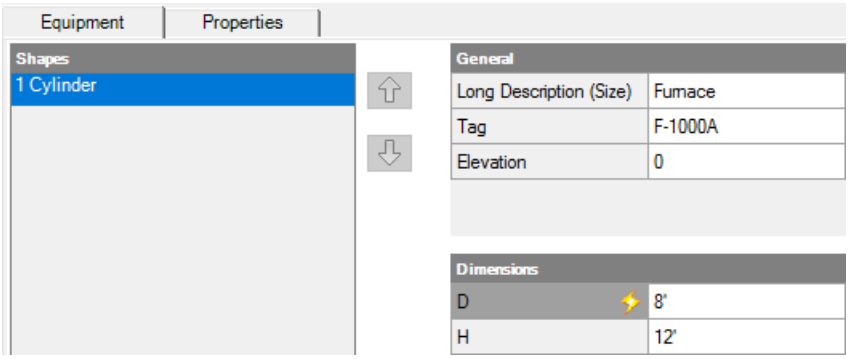

Figure P-19 *Shapes to be added, tag, and dimension values to be assigned to the Boiler Drum*

After assigning all the values to the Boiler Drum in the **Create Equipment** dialog box, choose the **Create** button; you are prompted to specify the insertion point. Specify the insertion point as **(-56', -181', -14')** and orientation angle as **90** degrees, the Boiler Drum is placed at the required location.

After placing all the equipment, the model should look like the one shown in Figure P-20.

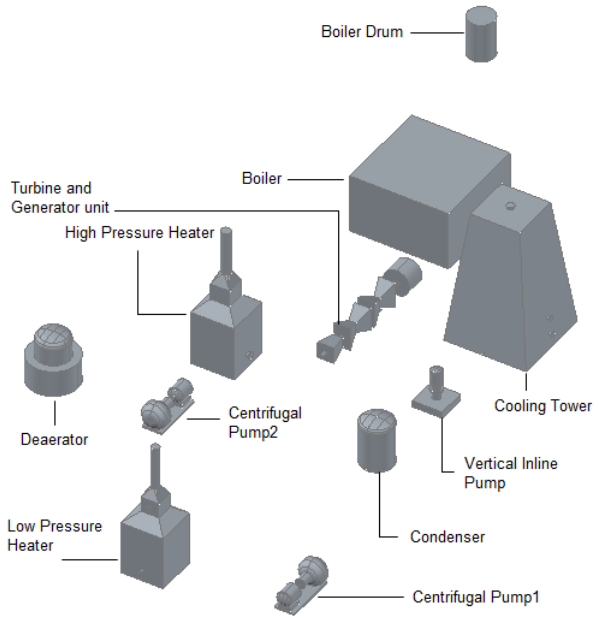

***Figure P-20 NE Isometric** view of the model after placing all the equipments*

Save the drawing by choosing the **Save** tool from the Quick Access Toolbar. Next, choose **Close > Current Drawing** from the Application Menu.

Note

While placing the equipment into the plant model, make sure that the orientation of the equipment is exactly similar to the one shown in Figure P-20.

CREATING SPEC FILE FOR THE PROJECT

After creating P&ID and placing equipment in the drawing, you need to connect the equipment. To do so, you need to have a data file containing all pipings, fittings, valves, and other connections required to connect the equipment to run the plant process effectively. The data file is termed as Spec File in AutoCAD Plant 3D. To create the Spec File, double-click on the **AutoCAD Plant 3D Spec Editor 2021 - English** icon on the desktop of your computer; the **Autodesk AutoCAD Plant 3D Spec Editor 2021** window is displayed, as shown in Figure P-21.

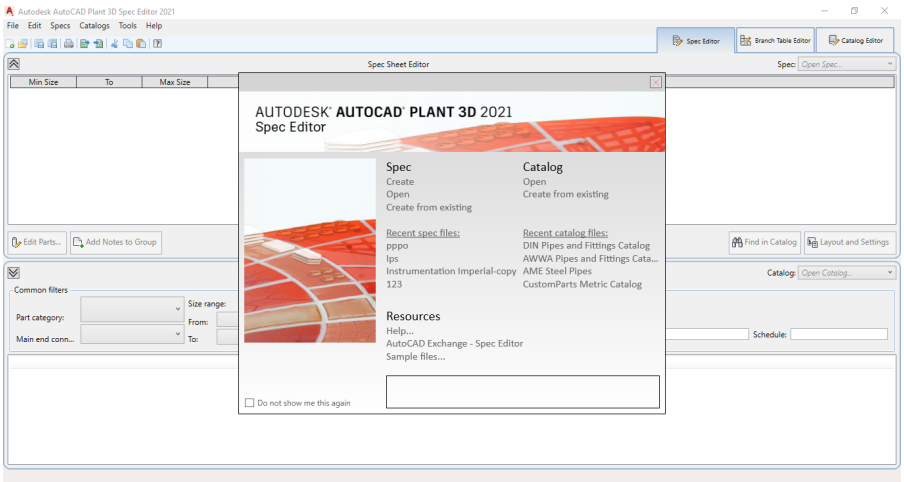

***Figure P-21** The AUTODESK AutoCAD Plant 3D Spec Editor 2021 window*

Choose the **Create** option from the **Spec** area of the **AUTODESK AUTOCAD Plant 3D 2021 Spec Editor** window; the **Create Spec** dialog box is displayed. Enter **POWER PLANT** in the **New Spec name** edit box and **Pipings and Fittings** in the **Spec description** edit box. Next, choose the **ASME Pipes and Fittings Catalog** option from the **Load catalog** drop-down list and then choose the **Create** button; the **Autodesk AutoCAD Plant 3D Spec Editor 2021** window is displayed with the **Spec Sheet** and **Catalog** areas.

Adding Parts to the Spec Sheet

Now, you need to add parts to the Spec Sheet. To do so, you need to filter the parts in the **Catalog** area under the **Spec Editor** tab by using the filter options available in it. The stepwise procedure to add parts to the Spec Sheet are given next.

1. Select the **Pipe** option from the **Part category** drop-down list in the **Common filters** area and apply the following filters:

   Size range: **10 to 20**
   Units: **in**

2. Select the **PIPE, SEAMLESS** option from the **Short Description** drop-down list in the Catalog Browser to show seamless pipes in it.

3. Select **PIPE, SEAMLESS, 40, PE, ASTM A106** from the Catalog Browser and choose the **Add to Spec** button from the **Spec Sheet** area; the part is added to the spec sheet.

4. Select the **Apply property overrides to parts added to spec** check box from the **Property overrides** area in the **Catalog** area and enter the following values:

   Material: **CS**
   Material Code: **A106**
   Schedule: **100**

5. Next, select the **Fittings** option from the **Part category** drop-down list and apply the following filters:

   Size range: **10 to 20**
   Main end connection: **FL**
   Short Description: **REDUCER ECC**
   Pressure Class: **150**

6. Select **REDUCER ECC, 150LW, FF, MSS SP 51** from the Catalog Browser and choose the **Add to Spec** button from the **Spec Sheet** area; the reducer gets added to the **Spec Sheet**.

   Similarly, add other parts to the **Spec Sheet** area by filtering the Catalog Browser using the following filter options:

   Part Category: **Fittings**
   Main end connection: **FL**
   Size range: **10 to 20**
   Pressure Class: **150**

   Select the following parts from the Catalog Browser:

   TEE, 150 LW, FF, MSS SP 51
   CROSS, 150 LW, FF, MSS SP 51

7. Choose the Flanges option from the Part Category drop-down list and apply the following filters:

   Main end connection: **FL**
   Size range: **10 to 20**
   Short Description: **FLANGE WN**

8. Select **FLANGE WN, 150 LB, RF, ASME B16.5** from the Catalog Browser and choose the **Add to Spec** button; the part will be added to the **Spec Sheet** area.

Next, you need to add valves and actuators to the Spec Sheet.

9. Choose the **Open Catalog** option from the **Catalog** drop-down list available in the area; the **Open** dialog box is displayed. In this dialog box, open the **CPak ASME** folder by double-clicking on it and then open the **ASME Valves Catalog.pcat file**; the **ASME Valves** Catalog is loaded in the **Catalog** area.

10. Select the **Valves** option from the **Part category** drop-down list and apply the following filters:

    Size range: **10 to 20**
    Units: **in**
    Pressure Class **150**

11. Press and hold the CTRL key on the keyboard and select **Control Valve, Ball, 150 LB, RF, ISA 75.08.02** and **Gate Valve, Conduit, 150 LB, RF, ASME B16.10** from the **Catalog Browser**. Next, choose the **Add to Spec** button; the valves are added to the **Spec Sheet** area.

Figure P-22 shows the **Spec Sheet** area after adding parts to it.

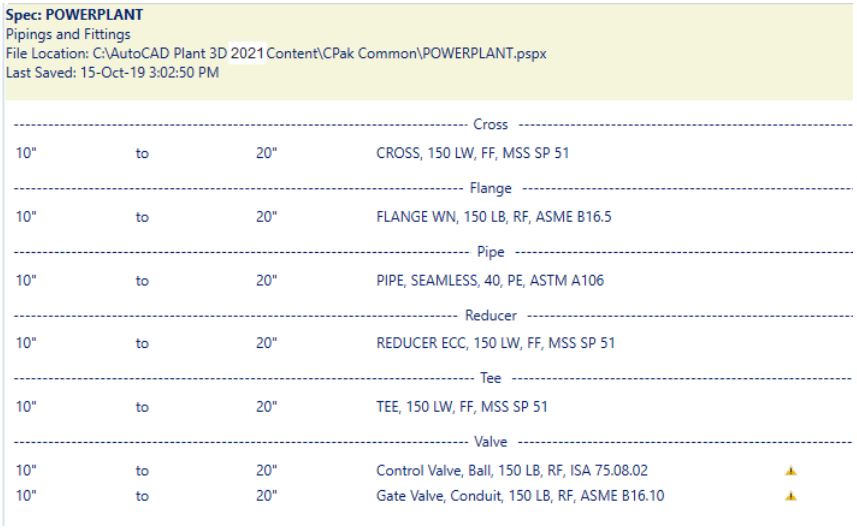

Figure P-22 *The* ***Spec Sheet*** *area after adding parts to it*

In this sheet, you can notice that an error symbol is displayed next to the parts with conflicts, refer to Figure P-22. This is because the system is not able to assign part usage priority to parts having the same size. Click on any of the error symbols displayed in the **Part Use Priority** column in the **Spec Sheet**; the **Part Use Priority** dialog box is displayed. Select **10"** size from the **Size Conflicts** list in the dialog box; the parts for the selected size are displayed in the **Spec Part Use Priority** list. Next, move **Gate Valve, Conduit, 150 LB, RF, ASME B16.10** to top in the **Spec Part Use Priority** list and select the **Mark as resolved** check box. Similarly, move **Gate Valve, Conduit, 150 LB, RF, ASME B16.10** to the top and select the **Mark as resolved** check box for all the sizes given in the **Size Conflicts** area. Next, choose the **OK** button; the dialog box is closed and a green dot is displayed in the **Part Use Priority** column, indicating that the conflict is resolved.

Saving the Spec File

1. Choose the Save As tool from the menu bar and specify the location as *C:\Users\User_name\Documents\POWER PLANT\Spec Sheets* to save the file.

2. Choose **File > Exit** from the menu bar to close the spec file.

ADDING AND MODIFYING NOZZLES

Now, you need to modify the existing nozzles and add some new nozzles to the equipment placed in the drawing sheet. To do so, open the **P3D** drawing file under **Plant 3D Drawings** node in **PROJECT MANAGER**.

Before you start adding and modifying nozzles, you need to add the spec file, which was created earlier, to the current project. To do so, select the **Pipe Specs** node from the **Project** area of the **PROJECT MANAGER** and right-click on it; a flyout is displayed. Next, choose the **Copy Specs to Project** option from the flyout; the **Select Files to Copy to Project** dialog box is displayed. Next, browse to the loaction where you have saved the spec file and select it; **POWER PLANT** is displayed in the **File name** edit box. Next, choose the **Open** button; the spec file is added under the **Pipe Specs** node. Next, select **POWER PLANT** from the **Spec Selector** drop-down list in the **Part Insertion** panel of the **Home** tab; the **TOOL PALETTES** is loaded with the parts contained in the spec file. Now, you can start adding and modifying nozzles.

Adding Nozzles to the Turbine and Generator unit

First, you need to add nozzles to the Turbine and Generator unit at the required locations. To do so, select the Turbine and Generator unit from the drawing area; the **Add Nozzle** grip is displayed. Click on the **Add Nozzle** grip; a dialog box for adding or modifying nozzles is displayed with **Change Location** tab chosen. Refer to Figures P-23 and P-24 for the values and parameters to be assigned to the nozzle. Figure P-23 shows the values to be entered in the dialog box for adding or modifying nozzles when the **Change Location** tab is chosen and Figure P-24 shows the values to be entered when the **Change Type** tab is chosen.

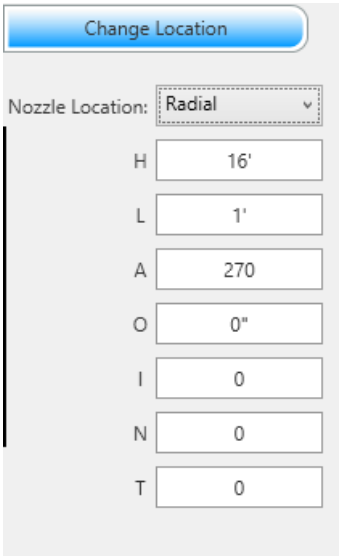

Figure P-23 *Values to be entered when* ***Change Location*** *tab is chosen*

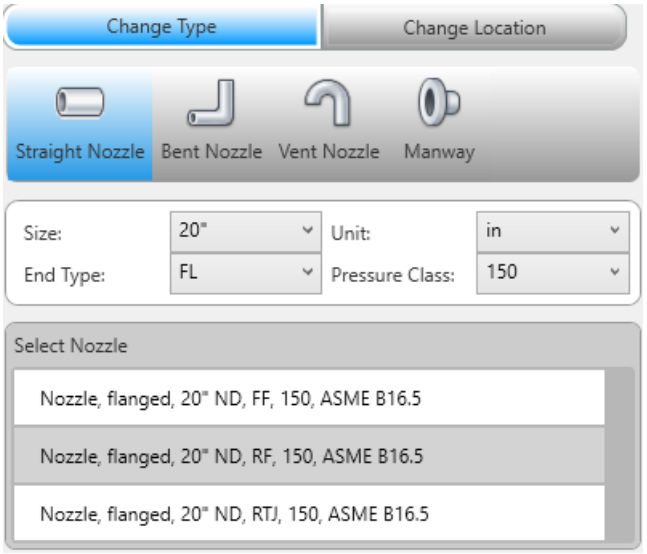

Figure P-24 *Values to be entered when* ***Change Type*** *tab*

Next, select **Nozzle, flanged, 20" ND, RF, 150, ASME B16.5** from the **Select Nozzle** area by double-clicking on it and then choose the **Close** button; the nozzle is placed at the bottom center of the Low Pressure Turbine.

Next, you need to place a nozzle at the top center of Intermediate Pressure Turbine. Figure P-25 shows the values to be entered in the dialog box for adding or modifying nozzles when the **Change Location** tab is chosen and Figure P-26 shows the values to be entered when the **Change Type** tab is chosen.

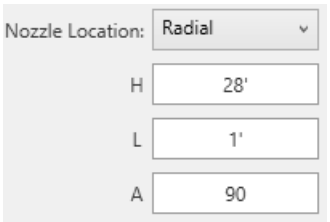

Figure P-25 *Values to be entered when* ***Change Location*** *tab*

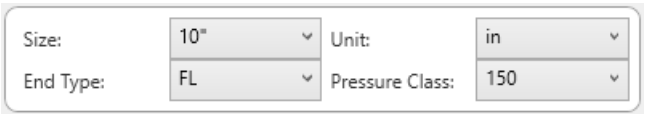

Figure P-26 *Values to be entered when* ***Change Type*** *tab*

Next, select **Nozzle, flanged, 10" ND, RF, 150, ASME B16.5** from the **Select Nozzle** area by double-clicking on it and then choose the **Close** button; the nozzle is placed at the top center of the Intermediate Pressure Turbine.

Similarly, you can place two more nozzles on the High Pressure Turbine. Figures P-27 and P-28 show the values to be entered in the dialog box for adding or modifying nozzles when the **Change Location** and **Change Type** tabs are chosen, respectively. Using these values, you can place the nozzle at the top of High Pressure Turbine.

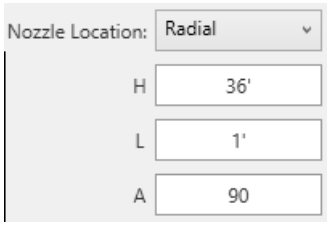

Figure P-27 *Values to be entered when* ***Change Location*** *tab*

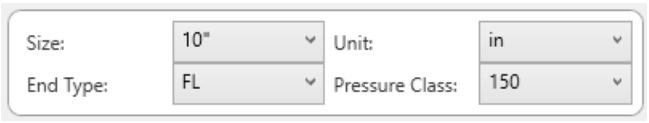

Figure P-28 *Values to be entered when* ***Change Type*** *tab*

After entering all values in the dialog box, select **Nozzle, flanged, 10" ND, RF, 150, ASME B16.5** from the **Select Nozzle** area by double-clicking on it and then choose the **Close** button; the nozzle is placed at the top of the High Pressure Turbine.

Figures P-29 and P-30 show the values to be entered in the dialog box for adding or modifying nozzles when the **Change Location** and **Change Type** tabs are chosen, respectively. Using these values, you can place the nozzle at the bottom of the High Pressure Turbine.

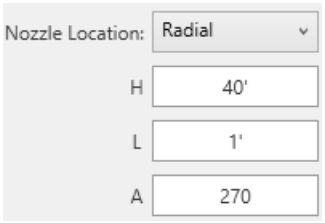

Figure P-29 *Values to be entered when* ***Change Location*** *tab*

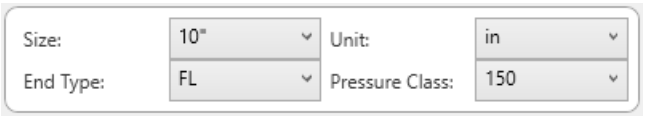

Figure P-30 *Values to be entered when* ***Change Type*** *tab*

Next, choose **Nozzle, flanged, 10" ND, RF, 150, ASME B16.5** from the **Select Nozzle** area by double-clicking on it and then choose the **Close** button; the nozzle is placed at the bottom of the High Pressure Turbine.

Adding Nozzles to the Condenser

Next, you need to add four nozzles to the Condenser (one at the top and three radial nozzles). Figure P-31 shows the Condenser in **Back** view labeled with nozzle numbers. Note that the nozzles are labeled only for your reference.

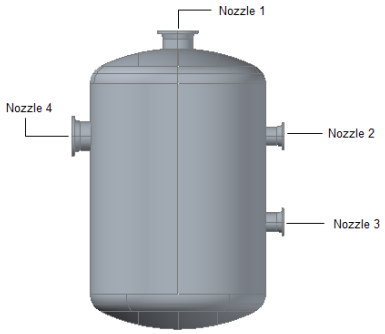

Figure P-31 *Condenser labelled with nozzle numbers (in* ***Back*** *view)*

Figures P-32 through P-35 show the values to be entered for nozzles labeled 1 to 4 in the **Change Location** and the **Change Type** tabs, respectively.

For Nozzle 1

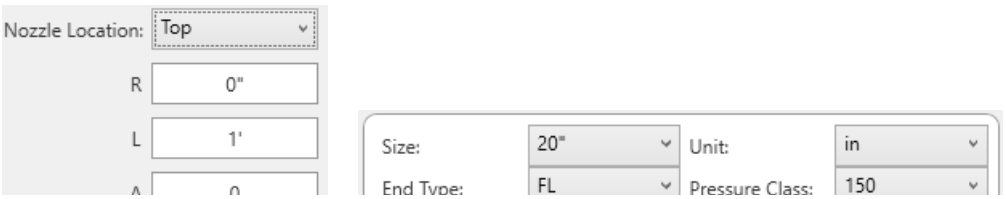

Figure P-32 *Values to be entered under* ***Change Location*** *and* ***Change Type*** *tabs for Nozzle 1*

After entering all the values under both the tabs, select **Nozzle, flanged, 20" ND, RF, 150, ASME B16.5** from the **Select Nozzle** area of the **Change Type** tab by double-clicking on it and then choose the **Close** button.

For Nozzle 2

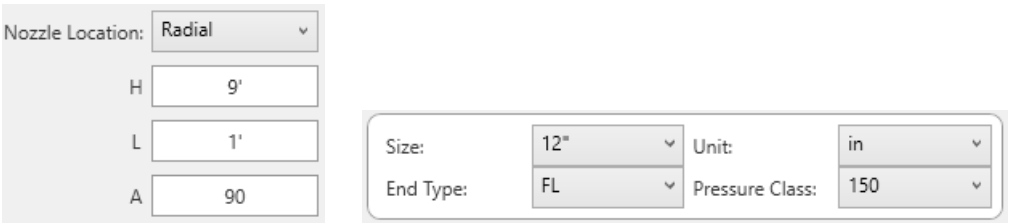

Figure P-33 *Values to be entered under* ***Change Location*** *and* ***Change Type*** *tabs for Nozzle 2*

Next, select **Nozzle, flanged, 12" ND, RF, 150, ASME B16.5** from the **Select Nozzle** area of the **Change Type** tab by double-clicking on it and then choose the **Close** button.

For Nozzle 3

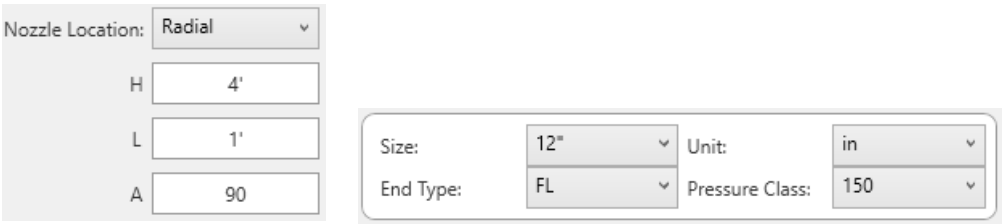

Figure P-34 *Values to be entered under* ***Change Location*** *and* ***Change Type*** *tabs for Nozzle 3*

Next, select **Nozzle, flanged, 12" ND, RF, 150, ASME B16.5** from the **Select Nozzle** area of the **Change Type** tab by double-clicking on it and then choose the **Close** button.

For Nozzle 4

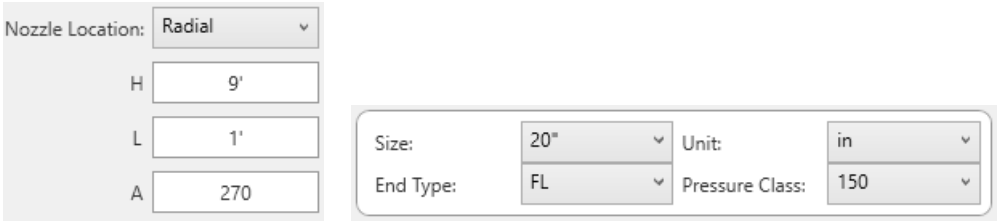

Figure P-35 *Values to be entered under* ***Change Location*** *and* ***Change Type*** *tabs for Nozzle 4*

Next, select **Nozzle, flanged, 20" ND, RF, 150, ASME B16.5** from the **Select Nozzle** area of the **Change Type** tab by double-clicking on it and then choose the **Close** button.

Adding and Modifying Nozzles of the Cooling Tower

Next, you need to add two nozzles to the Cooling Tower at the required locations and remove the existing ones. First, you will delete the existing nozzles of the Cooling Tower. To do so, press the CTRL key and select all the existing nozzles. Next, press the DELETE key. All the existing nozzles is deleted. Now, you will add nozzles at the required locations. Figure P-36 shows the Cooling Tower labeled with nozzle numbers.

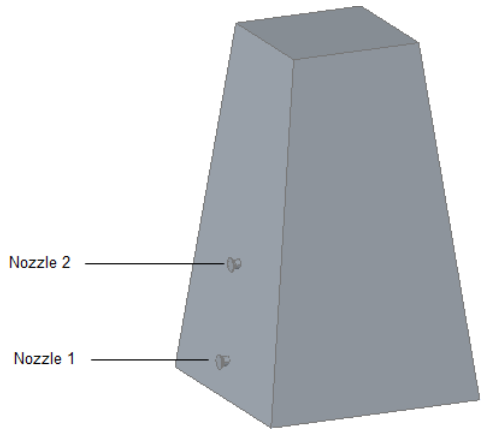

Figure P-36 *Cooling Tower labelled with nozzle numbers*

Tip

You can also modify the existing nozzles of the Cooling Tower instead of deleting them.

Figures P-37 and P-38 show the values to be entered (for nozzles labeled 1 and 2) in the **Change Location** and **Change Type** tabs, respectively.

For Nozzle 1

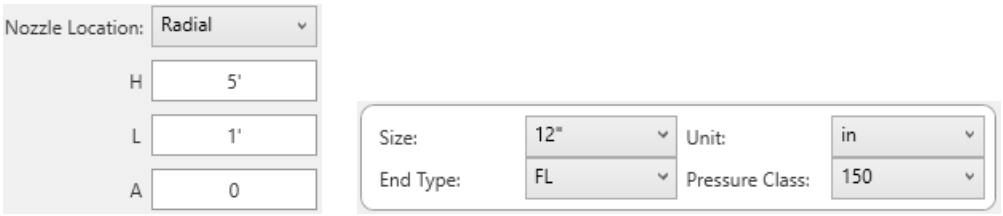

Figure P-37 *Values to be entered under* ***Change Location*** *and* ***Change Type*** *tabs for Nozzle 1*

After entering all the values under both the tabs, choose **Nozzle, flanged, 12" ND, RF, 150, ASME B16.5** from the **Select Nozzle** area of the **Change Type** tab by double-clicking on it and then choose the **Close** button.

For Nozzle 2

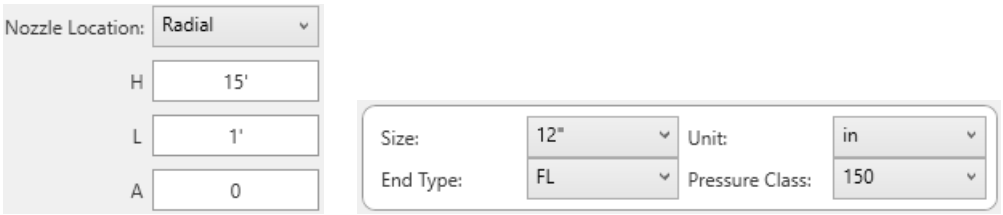

Figure P-38 *Values to be entered under* ***Change Location*** *and* ***Change Type*** *tabs for Nozzle 2*

Next, select **Nozzle, flanged, 12" ND, RF, 150, ASME B16.5** from the **Select Nozzle** area of the **Change Type** tab by double-clicking on it and then choose the **Close** button.

Modifying Nozzles of the Vertical Inline Pump

Now, you need to modify the existing nozzles of the Vertical Inline Pump. To do so, select the Vertical Inline Pump from the drawing area; two pencil grips is displayed on it. Next, click on the pencil grip which is closer to the Cooling Tower; a dialog box for adding or modifying nozzles is displayed. Choose the **Change Location** tab and enter the values shown in Figure P-39. Next, choose the **Change Type** tab and enter the values shown in Figure P-40.

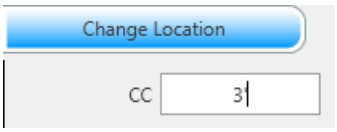

Figure P-39 *Values to be entered when* ***Change Location*** *tab*

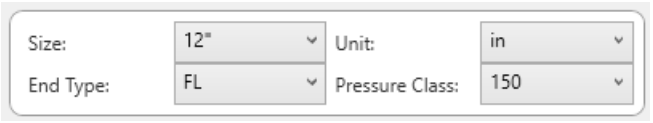

Figure P-40 *Values to be entered when* ***Change Type*** *tab*

After entering all the values under both the tabs, select **Nozzle, flanged, 12" ND, RF, 150, ASME B16.5** from the **Select Nozzle** area of the **Change Type** tab by double-clicking on it and then choose the **Close** button.

Again, select the Vertical Inline Pump and click on the other pencil grip; a dialog box for adding or modifying nozzles is displayed. Choose the **Change Location** tab and enter the values shown in Figure P-41. Next, choose the **Change Type** tab and enter the values shown in Figure P-41.



Figure P-41 *Values to be entered when* ***Change Location*** *and* ***Change Type*** *tabs are chosen*

After entering all the values under both the tabs, choose **Nozzle, flanged, 12" ND, RF, 150, ASME B16.5** from the **Select Nozzle** area of the **Change Type** tab by double-clicking on it and then choose the **Close** button. Figure P-42 shows the Vertical Inline Pump after modifying the nozzles.

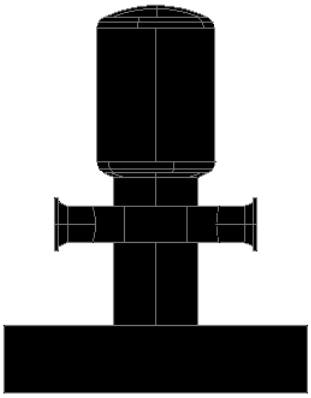

Figure P-42 *Vertical Inline Pump after modifying nozzles*

Modifying Nozzles of the Centrifugal Pump1

Now, you need to modify the existing nozzles of the Centrifugal Pump1. To do so, select the Centrifugal Pump1 from the drawing area; two pencil grips are displayed on it. Click on the grip which is displayed on the inlet side of the pump; a dialog box for adding or modifying nozzles is displayed. Choose the **Change Location** tab and enter the values shown in Figure P-43. Next, choose the **Change Type** tab and enter the values shown in Figure P-44.

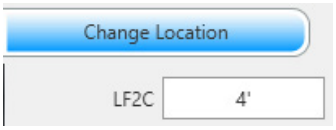

Figure P-43 *Values to be entered when* ***Change Location*** *tab*

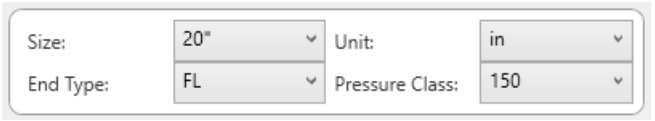

Figure P-44 *Values to be entered when* ***Change Type*** *tab*

After entering all the values under both the tabs, choose **Nozzle, flanged, 20" ND, RF, 150, ASME B16.5** from the **Select Nozzle** area of the **Change Type** tab by double-clicking on it and then choose the **Close** button.

Similarly, to modify the outlet nozzle of the pump, enter the values shown in Figures P-45 and P-46 under the **Change Location** and **Change Type** tabs, respectively.

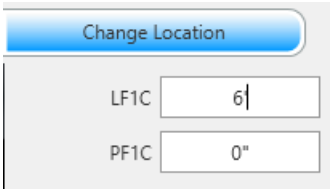

Figure P-45 *Values to be entered when* ***Change Location*** *tab*

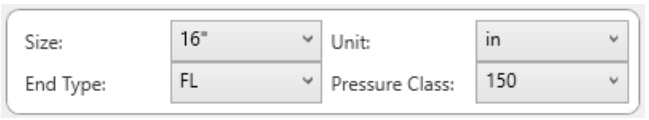

Figure P-46 *Values to be entered when* ***Change Type*** *tab*

After entering all the values under both the tabs, choose **Nozzle, flanged, 16" ND, RF, 150, ASME B16.5** from the **Select Nozzle** area of the **Change Type** tab by double-clicking on it and then choose the **Close** button.

Adding and Modifying Nozzles of the Low Pressure Heater

Now, you need to delete the existing nozzles of the Low Pressure Heater and add new nozzles to it at the required locations. So, you will first remove the existing nozzles of the Low Pressure Heater. To do so, press the CTRL key and select all the existing nozzles at once and then press the DELETE key.

Next, follow the same procedure to add two nozzles to the Low Pressure Heater. Figures P-47 and P-48 show the values to be entered under the **Change Location** and **Change Type** tabs for the first nozzle (the one facing Centrifugal Pump1).

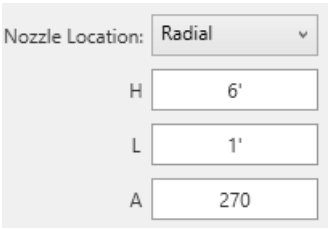

Figure P-47 *Values to be entered when* ***Change Location*** *tab*

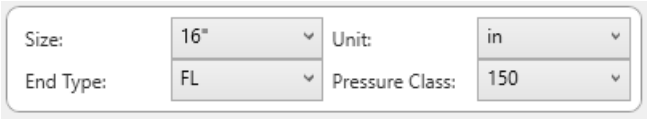

Figure P-48 *Values to be entered when* ***Change Type*** *tab*

After entering all the values under both the tabs, choose **Nozzle, flanged, 16" ND, RF, 150, ASME B16.5** from the **Select Nozzle** area of the **Change Type** tab by double-clicking on it and then choose the **Close** button.

Figures P-49 and P-50 show the values to be entered under the **Change Location** and **Change Type** tabs for the second nozzle (the one facing Deaerator).

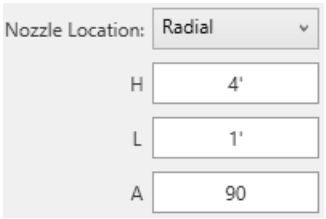

Figure P-49 *Values to be entered when* ***Change Location*** *tab*

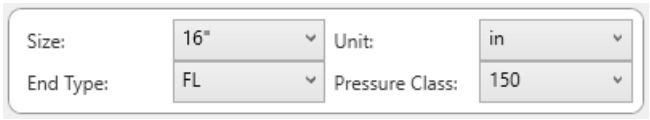

Figure P-50 *Values to be entered when* ***Change Type*** *tab*

After entering all the values under both the tabs, choose **Nozzle, flanged, 16" ND, RF, 150, ASME B16.5** from the **Select Nozzle** area of the **Change Type** tab by double-clicking on it and then choose the **Close** button.

Adding Nozzles to the Deaerator

Now, we need to add two nozzles to the Deaerator. Figures P-51 and P-52 show the values to be entered under the **Change Location** and **Change Type** tabs for the first nozzle (the one facing Low Pressure Heater).

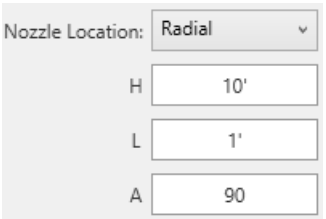

Figure P-51 *Values to be entered when* ***Change Location*** *tab*

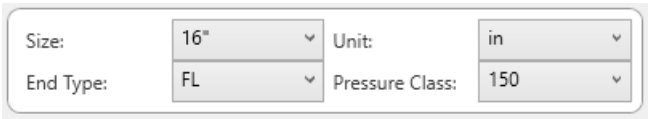

Figure P-52 *Values to be entered when* ***Change Type*** *tab*

After entering all the values under both the tabs, choose **Nozzle, flanged, 16" ND, RF, 150, ASME B16.5** from the **Select Nozzle** area of the **Change Type** tab by double-clicking on it and then choose the **Close** button.

Figures P-53 and P-54 show the values to be entered under the **Change Location** and **Change Type** tabs for the second nozzle (the one at the bottom center of Deaerator).

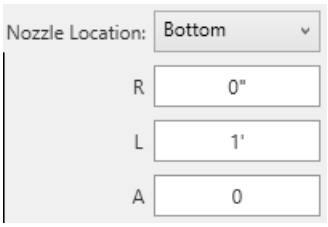

Figure P-53 *Values to be entered when* ***Change Location*** *tab*

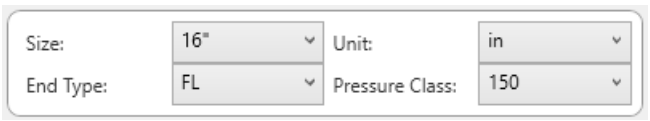

Figure P-54 *Values to be entered when* ***Change Type*** *tab*

After entering all the values under both the tabs, choose **Nozzle, flanged, 16" ND, RF, 150, ASME B16.5** from the **Select Nozzle** area of the **Change Type** tab by double-clicking on it and then choose the **Close** button.

Modifying Nozzles of the Centrifugal Pump2

Now, you need to modify the existing nozzles of the Centrifugal Pump2. To do so, select the **Centrifugal Pump2** from the drawing area; two pencil grips are displayed on it. Next, click on the grip displayed on the inlet side of the pump; a dialog box for adding or modifying nozzles is displayed. Choose the **Change Location** tab and enter the values shown in Figure P-55. Next, choose the **Change Type** tab and enter the values shown in Figure P-56.

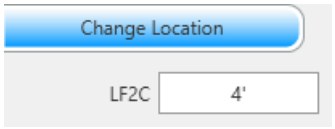

Figure P-55 *Values to be entered when* ***Change Location*** *tab*

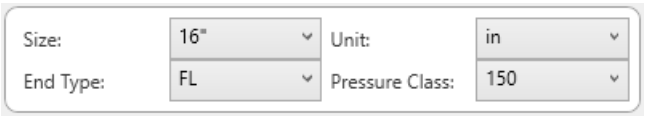

Figure P-56 *Values to be entered when* ***Change Type*** *tab*

After entering all the values under both the tabs, choose **Nozzle, flanged, 16" ND, RF, 150, ASME B16.5** from the **Select Nozzle** area of the **Change Type** tab by double-clicking on it and then choose the **Close** button.

Similarly, to modify the outlet nozzle of the pump, enter the values shown in Figures P-57 and P-58 under the **Change Location** and **Change Type** tabs, respectively.

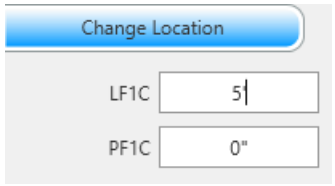

Figure P-57 *Values to be entered when the* ***Change Location*** *tab is chosen*

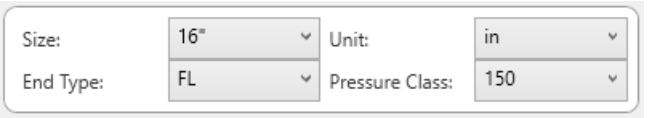

Figure P-58 *Values to be entered when the* ***Change Type*** *tab is chosen*

After entering all the values under both the tabs, choose **Nozzle, flanged, 16" ND, RF, 150, ASME B16.5** from the **Select Nozzle** area of the **Change Type** tab by double-clicking on it and then choose the **Close** button.

Adding and Modifying Nozzles of the High Pressure Heater

Now, you need to delete the existing nozzles of the High Pressure Heater and add new nozzles to it at the required locations. Firstly, you will delete the existing nozzles of the High Pressure Heater. To do so, press the CTRL key and select all the existing nozzles at once and then press the DELETE key.

Next, follow the same procedure explained above to add two nozzles to the High Pressure Heater. Figures P-59 and P-60 show the values to be entered under the **Change Location** and **Change Type** tabs for the first nozzle (the one facing Centrifugal Pump2).

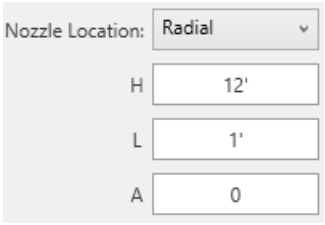

Figure P-59 *Values to be entered when the* ***Change Location*** *tab*

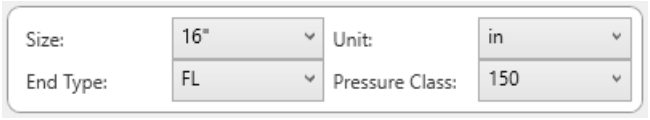

Figure P-60 *Values to be entered when the* ***Change Type*** *tab*

After entering all the values under both the tabs, choose **Nozzle, flanged, 16" ND, RF, 150, ASME B16.5** from the **Select Nozzle** area of the **Change Type** tab by double-clicking on it and then choose the **Close** button.

Figures P-61 and P-62 show the values to be entered under the **Change Location** and **Change Type** tabs for the second nozzle (the one facing Boiler).

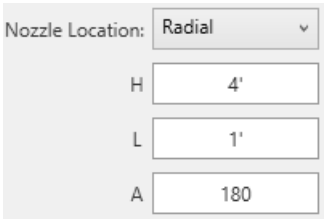

Figure P-61 *Values to be entered when the* ***Change Location*** *tab*

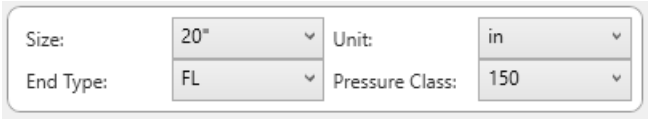

Figure P-62 *Values to be entered when the* ***Change Type*** *tab*

After entering all the values under both the tabs, choose **Nozzle, flanged, 20" ND, RF, 150, ASME B16.5** from the **Select Nozzle** area of the **Change Type** tab by double-clicking on it and then choose the **Close** button.

Adding Nozzles to the Boiler and Boiler Drum

Now, you will place nozzles on the Boiler which is a custom equipment you created earlier. To do so, select the Boiler from the drawing area; the **Add Nozzle** grip is displayed on it. Click on the **Add Nozzle** grip, you are prompted to specify the nozzle center. Press and hold the SHIFT key and then right-click; a flyout is displayed. Next, choose the **From** option from the flyout; you are prompted to specify the base point. Specify the base point at the bottom left vertex of the Boiler, refer to Figure P-63. After specifying the base point, you are prompted to specify the offset value. Enter @**-6',12',0'** at the command prompt; you are prompted to specify the nozzle direction. Move the cursor vertically down and click to specify the nozzle direction; a dialog box for adding or modifying nozzles is displayed. Next, choose the **Change Type** tab and enter the values shown in Figure P-64.

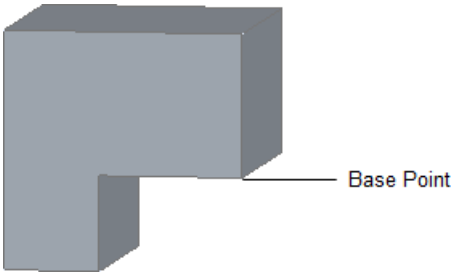

Figure P-63 *Base point to be selected while using* ***From*** *snap*

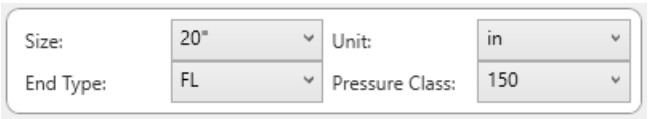

Figure P-64 *Values to be entered when the* ***Change Type*** *tab*

After entering all the values under the **Change Type** tab, choose **Nozzle, flanged, 20" ND, RF, 150, ASME B16.5** from the **Select Nozzle** area of the **Change Type** tab by double-clicking on it and then choose the **Close** button.

Now, you have specified the nozzle location. Next, you need to place a flange at the nozzle point. To do so, choose **FLANGE WN, FL, RF, 150, (POWER PLANT)** from the **Flange** area in the **Dynamic Pipe Spec** tab of the **TOOL PALETTES - AUTOCAD PLANT 3D - PIPING COMPONENTS**; you are prompted to specify the insertion point. Press and hold the SHIFT key and right-click, a flyout is displayed. Next, choose the **Node** option from the flyout and place the flange at the node of the nozzle point located earlier; you are prompted to specify the rotation angle. Specify the rotation angle as 0 degrees using the cursor and then press the ESC key; the flange is placed at the specified location, as shown in Figure P-65.

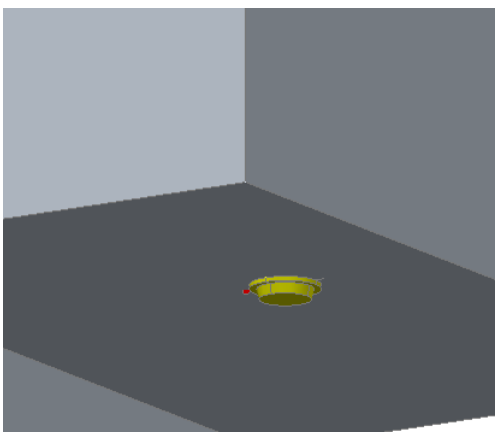

Figure P-65 *Flange placed at the specified location*

Note

While specifying coordinates for the placement of nozzles on the Boiler unit, make sure that the UCS is set to ***World****.*

Now, you need to add nozzles at the top face of the Boiler. Figure P-66 shows the Boiler labeled with nozzle numbers which are required to be placed at its top face.

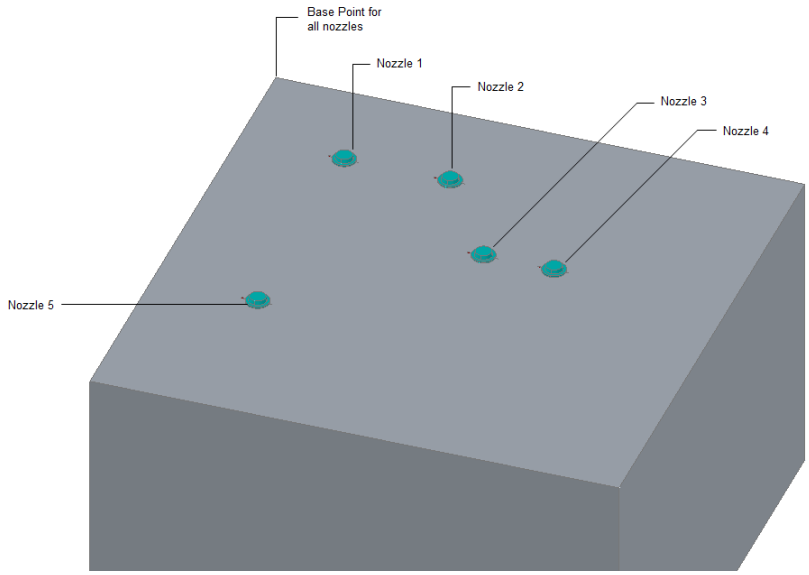

Figure P-66 *Top face of the Boiler with labelled nozzles*

Nozzle 1

To place nozzle 1, select the Boiler from the drawing area; the **Add Nozzle** grip is displayed. Click on the **Add Nozzle** grip; you are prompted to specify the nozzle center. Press and hold the SHIFT key and then right-click; a flyout is displayed. Next, choose the **From** option from the flyout, you are prompted to specify the base point. Specify the base point, refer to Figure P-66; you are prompted to specify the offset value. Enter @**6',-6',0'** at the command prompt, you are prompted to specify the nozzle direction. Move the cursor vertically up and click to specify the nozzle direction; a dialog box for adding or modifying nozzles is displayed. Next, choose the **Change Type** tab and enter the values shown in Figure P-67.

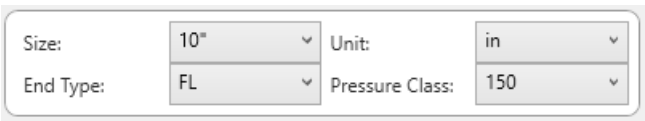

Figure P-67 *Values to be entered in the* ***Change Type*** *tab*

After entering all the values under the **Change Type** tab, choose **Nozzle, flanged, 10" ND, RF, 150, ASME B16.5** from the **Select Nozzle** area of the **Change Type** tab by double-clicking on it and then choose the **Close** button. This step will remain same for rest of the nozzles to be placed on the boiler.

Now, you have specified the nozzle location. Next, you need to place a flange at the nozzle point. To do so, choose the **FLANGE WN, FL, RF, 150, (POWER PLANT)** from the Flange area in the **Dynamic Pipe Spec** tab of the **TOOL PALETTES - AUTOCAD PLANT 3D - PIPING COMPONENTS**; you are prompted to specify the insertion point. Press and hold the SHIFT key and right-click, a flyout is displayed. Next, choose the **Node** option from the flyout and place the flange at the node of the nozzle point located earlier; you are prompted to specify the rotation angle. Specify the rotation angle as **0** degree using the cursor and then press the ESC key; the flange is placed at the required location, refer to Figure P-66.

Similarly, place the other nozzles at the required locations, refer to Figure P-66. Note that the base point will remain same for all the nozzles while using the **From** snap and the nozzle direction is vertically upwards for all the nozzles. The offset values for nozzles numbered 2 to 5 are given next.

Nozzle 2 : **@12',-6',0'**
Nozzle 3 : **@16',-12',0'**
Nozzle 4 : **@20',-12',0'**
Nozzle 5 : **@6',-20',0'**

After specifying the nozzle points, place **FLANGE WN, FL, RF, 150, (POWER PLANT)** at all the nozzle points. After placing the flanges, the top face of Boiler should look similar to the one shown in Figure P-66.

Next, you need to place two nozzles, one at the front and other at the back face of the Boiler. First, you will place the nozzle on the front face. To do so, follow the same procedure as explained before. Refer to Figure P-68 for the base point to be selected while using the **From** snap.

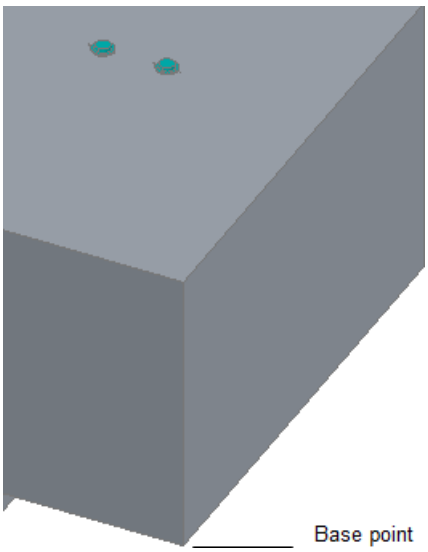

Figure P-68 *Base point to be selected while using* ***From*** *snap*

Offset value for nozzle on front face : **@0',12',8'**

Similarly, place the nozzle on back face of the Boiler. Refer to Figure P-69 for the base point to be selected while using the **From** snap.

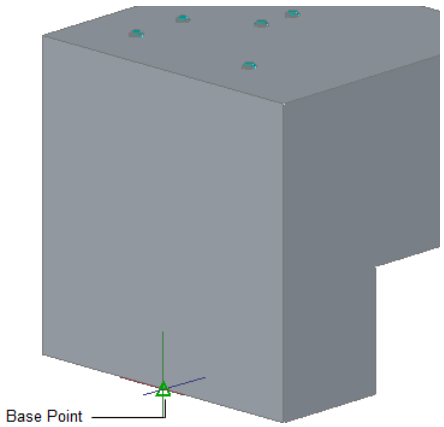

Figure P-69 *Base point to be selected while using* ***From*** *snap*

Offset value for nozzle on back face : **@0,0,12'**

After specifying the nozzle points on the front and back faces, place **FLANGE WN, FL, RF, 150, (POWER PLANT)** at both the nozzle points.

Next, you need to place nozzles on the Boiler Drum. Figure P-70 shows the Boiler Drum labeled with nozzle numbers.

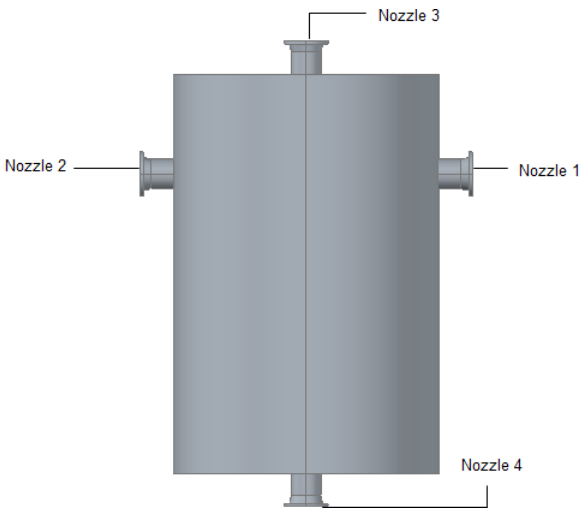

Figure P-70 *Boiler Drum labeled with nozzle numbers*

Figures P-71 through P-74 show the values to be entered (for nozzles labeled 1 to 4) in the **Change Location** and the **Change Type** tabs, respectively.

For Nozzle 1

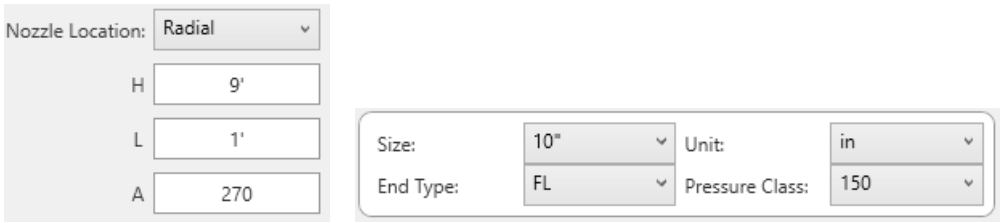

Figure P-71 *Values to be entered under* ***Change Location*** *and* ***Change Type*** *tabs for Nozzle 1*

After entering all the values under both the tabs, choose **Nozzle, flanged, 10" ND, RF, 150, ASME B16.5** from the **Select Nozzle** area of the **Change Type** tab by double-clicking on it and then choose the **Close** button. This step will remain same for all the nozzles to be placed on the Boiler Drum.

For Nozzle 2

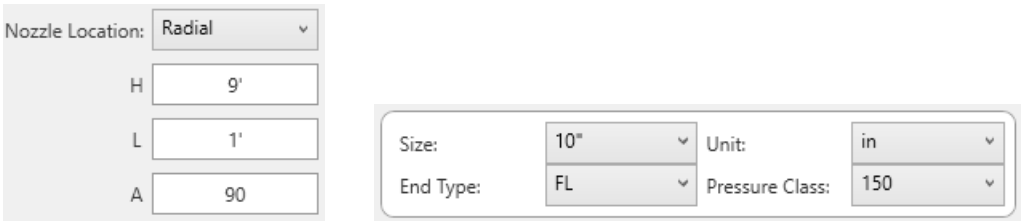

Figure P-72 *Values to be entered under* ***Change Location*** *and* ***Change Type*** *tabs for Nozzle 2*

For Nozzle 3

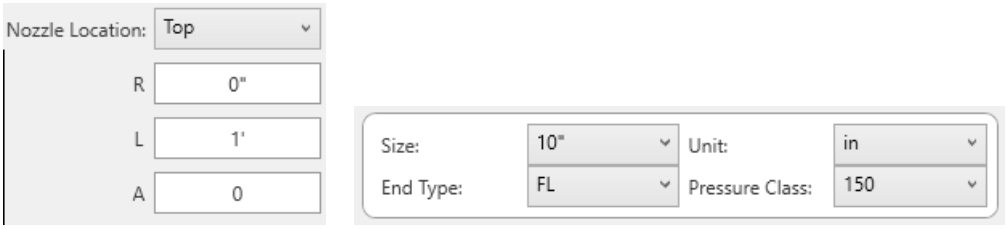

Figure P-73 *Values to be entered under* ***Change Location*** *and* ***Change Type*** *tabs for Nozzle 3*

For Nozzle 4

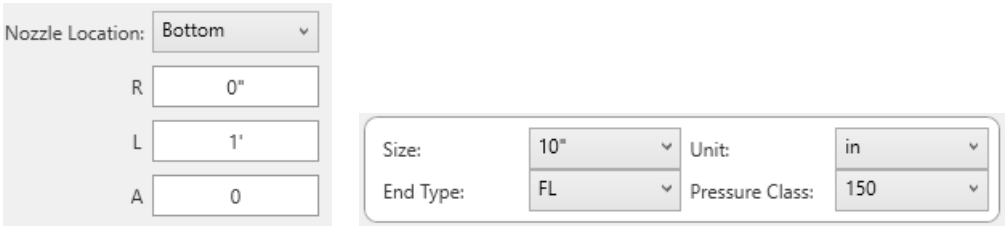

Figure P-74 *Values to be entered under* ***Change Location*** *and* ***Change Type*** *tabs for Nozzle 4*

CONNECTING THE EQUIPMENTS

After placing the nozzles at the required locations, you need to connect the equipment. This can be done by making piping connections between the equipment.

First, you will connect the Low Pressure Turbine with the Condenser. To do so, choose the **Route New Line** option from the **Line Number Selector** drop-down of the **Part Insertion** panel; the **Assign Tag** dialog box is displayed. Enter **1001** in the **Number** edit box in this dialog box. Next, select the line size as **20"** from the **Size** drop-down list. Next, choose the **Assign** button; the **Assign Tag** dialog box is closed and you are prompted to specify the start point of the pipe. Press and hold the SHIFT key and right-click to display a shortcut menu. Choose the **Node** option from the shortcut menu displayed and then select the node of the nozzle located at the bottom of the Low Pressure Turbine; you are prompted to specify the next point. Move the cursor vertically down and select the node of the nozzle located at the top of the Condenser, the pipe is added between the two nozzles, as shown in Figure P-75.

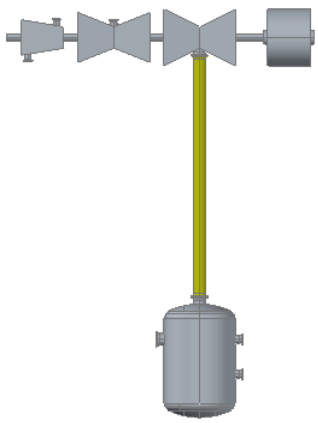

Figure P-75 *Pipe added between bottom nozzle of the Low Pressure Turbine and top nozzle of the Condenser*

Next, you will connect the lower nozzle of the Cooling Tower with the inlet nozzle of the Vertical Inline Pump. To do so, choose the **Route New Line** tool from the **Line Number Selector** drop-down of the **Part Insertion** panel; the **Assign Tag** dialog box is displayed. Enter **2002** in the **Number** edit box in this dialog box. Select the line size as **12"** from the **Size** drop-down list. Next, choose the **Assign** button; the **Assign Tag** dialog box is closed and you are prompted to specify the start point of the pipe. Press and hold the SHIFT key and right-click to display a shortcut menu. Choose the **Node** option from the shortcut menu displayed and then select the node of the lower nozzle of the Cooling Tower; you are prompted to specify the next point. Move the cursor horizontally towards the Vertical Inline Pump and select the node of the inlet nozzle of the Vertical Inline Pump, the pipe is added between the two nozzles as shown in Figure P-76.

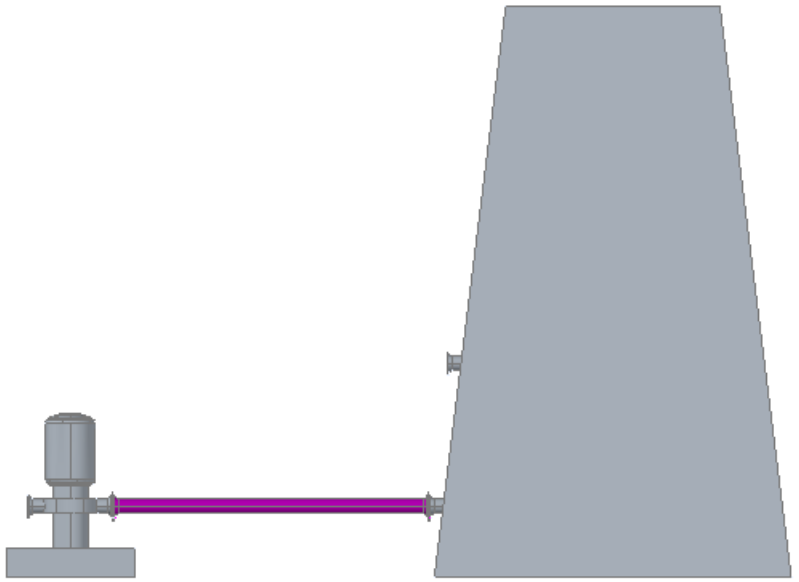

Figure P-76 *Pipe added between lower nozzle of the Cooling Tower and inlet nozzle of the Vertical Inline Pump*

Next, you need to connect the outlet nozzle of the Vertical Inline Pump with the lower radial nozzle of the Condenser. Follow the same procedure explained before to connect the equipment and refer to Figure P-77 for the values to be assigned in the **Assign Tag** dialog box.

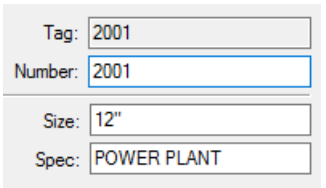

Figure P-77 *Values to be assigned in the* ***Assign Tag*** *dialog box*

Figure P-78 shows the pipe connected between the Vertical Inline Pump and the Condenser.

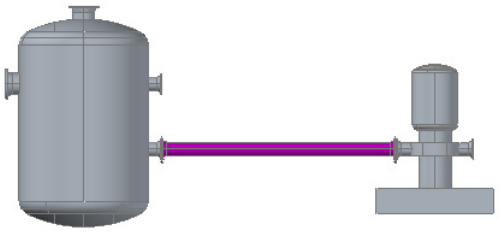

Figure P-78 *Pipe added between outlet nozzle of the Vertical Inline Pump and lower radial nozzle of the Condenser*

Next, you need to add a pipe between the upper radial nozzle of the Condenser with the upper nozzle of the Cooling Tower. To do so, choose the **Route New Line** tool from the **Line Number Selector** drop-down of the **Part Insertion** panel; the **Assign Tag** dialog box is displayed. Enter **2000** in the **Number** edit box in this dialog box. Select the line size as **12"** from the **Size** drop-down list. Next, choose the **Assign** button; the **Assign Tag** dialog box is closed and you are prompted to specify the start point of the pipe. Press and hold the SHIFT key and right-click to display a shortcut menu. Choose the **Node** option from the shortcut menu displayed and then select the node of the upper nozzle of the Condenser; you are prompted to specify the next point. Move the cursor horizontally towards the Cooling Tower and select the node of the upper nozzle of the Cooling Tower. Next, press ENTER to accept the suggested piping solution. Figure P-79 shows the pipe connected between the upper radial nozzle of the Condenser and the upper nozzle of the Cooling Tower.

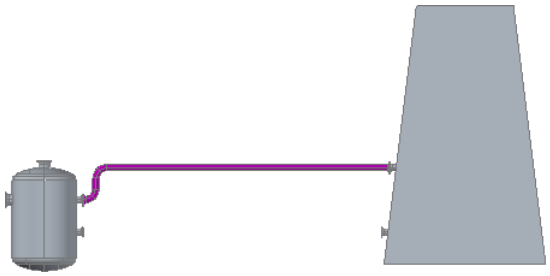

Figure P-79 *Pipe added between upper radial nozzle of the Condenser and upper nozzle of the Cooling Tower*

Now, you need to connect the radial nozzle of the Condenser facing the Centrifugal Pump1 with the inlet nozzle of the Centrifugal Pump1. To do so, choose the **Route New Line** tool from the **Line Number Selector** drop-down of the **Part Insertion** panel; the **Assign Tag** dialog box is displayed. Enter **1002** in the **Number** edit box in this dialog box. Select the line size as **20"** from the **Size** drop-down list. Next, choose the **Assign** button; the **Assign Tag** dialog box is closed and you are prompted to specify the start point of the pipe. Press and hold the SHIFT key and right-click to display a shortcut menu. Choose the **Node** option from the shortcut menu displayed and then select the node of the radial nozzle of the Condenser; you are prompted to specify the next point. Move the cursor towards the Centrifugal Pump1 and select the node of the inlet nozzle of the Centrifugal Pump1. Next, press ENTER to accept the suggested piping solution. Figure P-80 shows the pipe connected between the radial nozzle of the Condenser and the inlet nozzle of the Centrifugal Pump1.

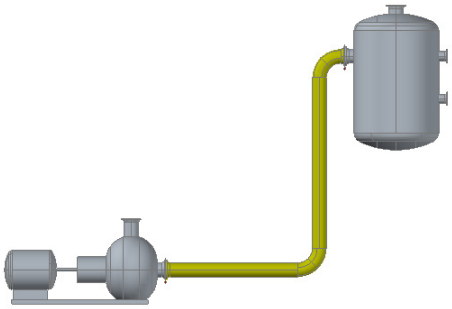

Figure P-80 *Pipe added between upper radial nozzle of the Condenser and inlet nozzle of the Centrifugal Pump1*

Similarly, connect the outlet nozzle of the Centrifugal Pump1 with the inlet nozzle of Low Pressure Heater. Refer to Figure P-81 for the values to be assigned in the **Assign Tag** dialog box.

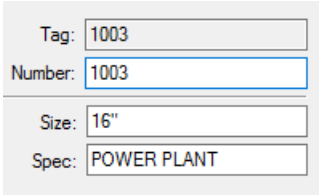

Figure P-81 *Values to be assigned in the* ***Assign Tag*** *dialog box*

Note that you have to click on **Next** option and then choose the **Accept** option in the command prompt when you are prompted to specify the piping solution. Figure P-82 shows the pipe connected between the outlet nozzle of the Centrifugal Pump1 and the inlet nozzle of the Low Pressure Heater.

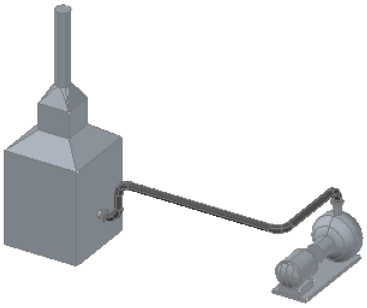

Figure P-82 *Pipe added between outlet nozzle of the Centrifugal Pump1 and inlet nozzle of the Low Pressure Heater*

Similarly, connect the outlet nozzle of the Low Pressure Heater with the inlet nozzle of the Deaerator. Refer to Figure P-83 for the values to be assigned in the **Assign Tag** dialog box. The pipe connected should look like the one shown in Figure P-84.

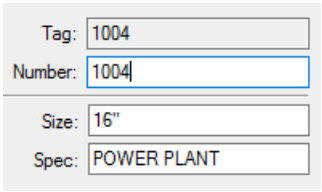

Figure P-83 *Values to be assigned in the* ***Assign Tag*** *dialog box*

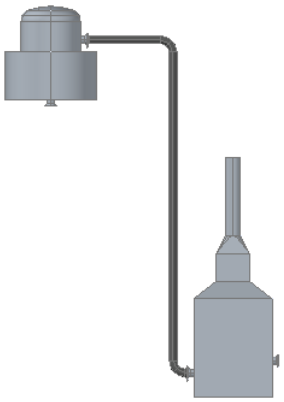

Figure P-84 *Pipe added between outlet nozzle of the Low Pressure Heater and inlet radial nozzle of the Deaerator*

Next, connect the outlet nozzle of the Deaerator with the inlet nozzle of the Centrifugal Pump2. Refer to Figure P-85 for the values to be assigned in the **Assign Tag** dialog box. The pipe connected should look like the one shown in Figure P-86.

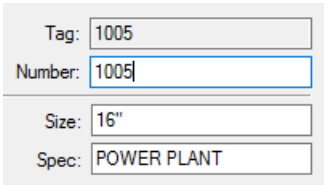

Figure P-85 *Values to be assigned in the* ***Assign Tag*** *dialog box*

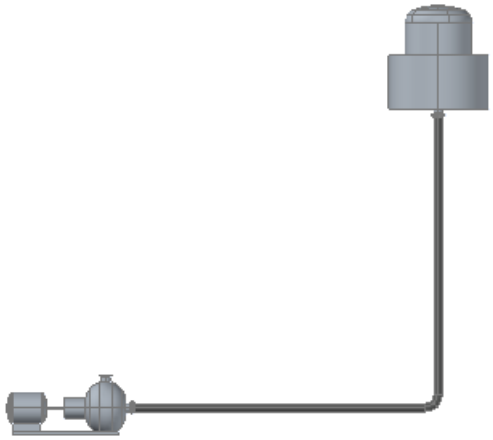

Figure P-86 *Pipe added between outlet nozzle of the Deaerator and inlet nozzle of the Centrifugal Pump2*

Next, connect the outlet nozzle of the Centrifugal Pump2 with the inlet nozzle of the High Pressure Heater. Refer to Figure P-87 for the values to be assigned in the **Assign Tag** dialog box. The pipe connected should look like the one shown in Figure P-88.

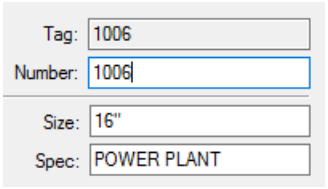

Figure P-87 *Values to be assigned in the* ***Assign Tag*** *dialog box*

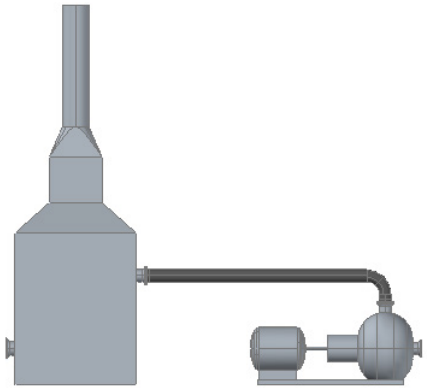

Figure P-88 *Pipe added between outlet nozzle of the Centrifugal Pump2 and inlet nozzle of the High Pressure Heater*

Next, connect the outlet nozzle of the High Pressure Heater with the inlet nozzle of the Economiser unit on the Boiler. Refer to Figure P-89 for the values to be assigned in the **Assign Tag** dialog box. The pipe connected should look like the one shown in Figure P-90.

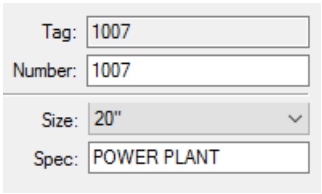

Figure P-89 *Values to be assigned in the* ***Assign Tag*** *dialog box*

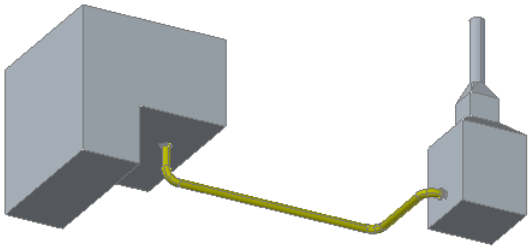

Figure P-90 *Pipe added between outlet nozzle of the High Pressure Heater and inlet nozzle of the Economiser unit on the Boiler*

Now, connect the outlet nozzle of the Economiser unit with the left radial nozzle on the Boiler Drum. To do so, choose the **Route New Line** tool from the **Line Number Selector** drop-down of the **Part Insertion** panel; the **Assign Tag** dialog box is displayed. Enter **3000** in the **Number** edit box in this dialog box. Select the line size as **10"** from the **Size** drop-down list. Next, choose the **Assign** button; the **Assign Tag** dialog box is closed and you are prompted to specify the start point of the pipe. Press and hold the SHIFT key and right-click to display a shortcut menu. Choose the **Node** option from the shortcut menu displayed and then select the node of the outlet nozzle of the Economiser unit; you are prompted to specify the next point. Move the cursor horizontally towards right and enter **4'** at the command prompt; you are prompted to specify the next point. Next, choose the **Plane** option from the command prompt. Move the cursor vertically upwards and enter **25'** at the command prompt. Next, press and hold the SHIFT key and right-click; a shortcut menu is displayed. Choose the **Node** option from the shortcut menu and select the node of the left radial nozzle on the Boiler Drum.

Next, press ENTER to accept the suggested piping solution. The pipe connected should look like the one shown in Figure P-91.

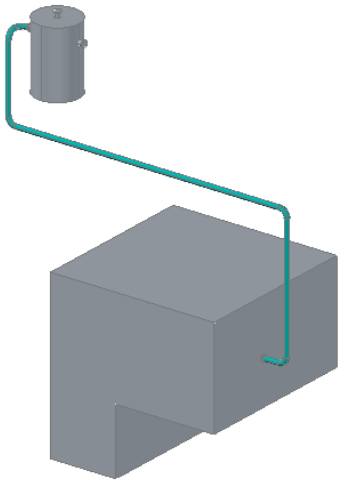

Figure P-91 *Pipe added between outlet nozzle of the Economiser unit and left radial nozzle of the Boiler Drum*

Next, connect the bottom nozzle of the Boiler Drum to the inlet nozzle of the Evaporator unit. Refer to Figure P-92 for the values to be assigned in the **Assign Tag** dialog box. The pipe connected should look like the one shown in Figure P-93.

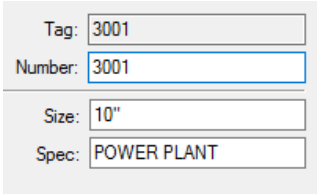

Figure P-92 *Values to be assigned in the* ***Assign Tag*** *dialog box*

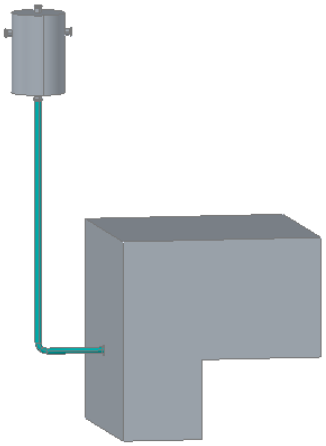

Figure P-93 *Pipe added between bottom nozzle of the Boiler Drum and inlet nozzle of the Evaporator unit on the Boiler*

Next, connect the outlet nozzle of the Evaporator unit with the right radial nozzle on the Boiler Drum. Refer to Figure P-94 for the values to be assigned in the **Assign Tag** dialog box. The pipe connected should look like the one shown in Figure P-95.

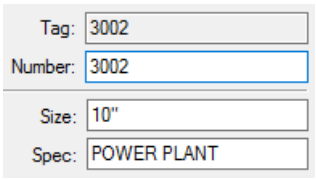

Figure P-94 *Values to be assigned in the* ***Assign Tag*** *dialog box*

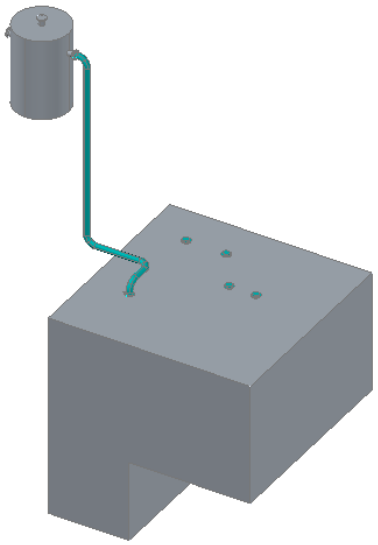

Figure P-95 *Pipe added between outlet nozzle of the Evaporator unit and right radial nozzle of the Boiler Drum*

Note that you have to click on **Next** option and then choose the **Accept** option in the command prompt while you are prompted to specify the piping solution.

Next, connect the top nozzle of the Boiler Drum to the inlet nozzle of the Super Heater. Refer to Figure P-96 for the values to be assigned in the **Assign Tag** dialog box. The pipe connected should look like the one shown in Figure P-97. Note that you have to click on the **Next** option thrice and then the **Accept** option in the command prompt while you are prompted to specify the piping solution.

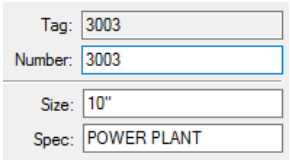

Figure P-96 *Values to be assigned in the* ***Assign Tag*** *dialog box*

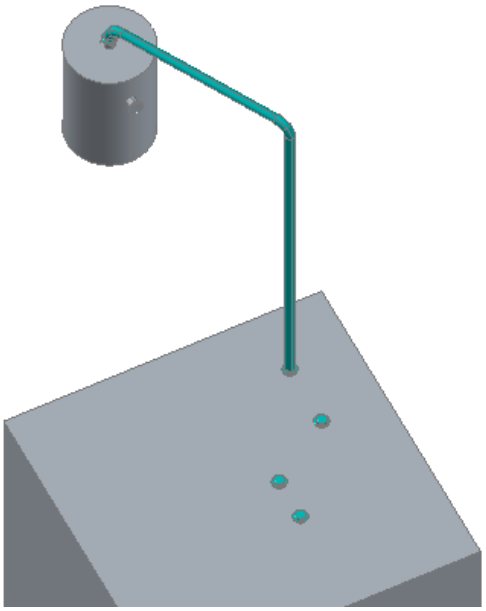

Figure P-97 *Pipe added between top nozzle of the Boiler Drum and inlet nozzle of the Super Heater unit on the Boiler*

Next, connect the outlet nozzle of the Super Heater with the nozzle at top of the High Pressure Turbine. Refer to Figure P-98 for the values to be assigned in the **Assign Tag** dialog box. The pipe connected should look like the one shown in Figure P-99. Note that you have to click on **Next** option twice and then the **Accept** option in the command prompt when you are prompted to specify the piping solution.

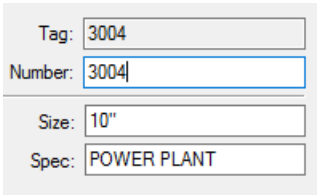

Figure P-98 *Values to be assigned in the* ***Assign Tag*** *dialog box*

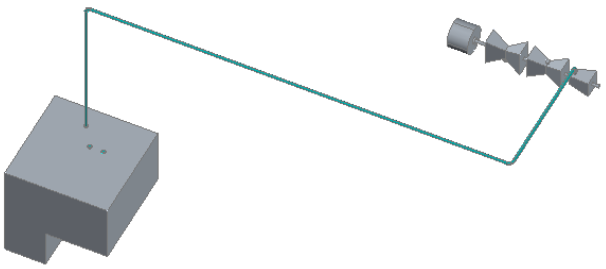

Figure P-99 *Pipe added between outlet nozzle of the Super Heater and top inlet nozzle of the High Pressure Heater*

Next, connect the bottom nozzle of the High Pressure Turbine with the inlet nozzle of the Reheater. Refer to Figure P-100 for the values to be assigned in the **Assign Tag** dialog box. The pipe connected should look like the one shown in Figure P-101. Note that you have to click on the **Next** option thrice and then on the **Accept** option in the command prompt when you are prompted to specify the piping solution.

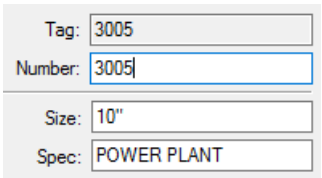

Figure P-100 *Values to be assigned in the* ***Assign Tag*** *dialog box*

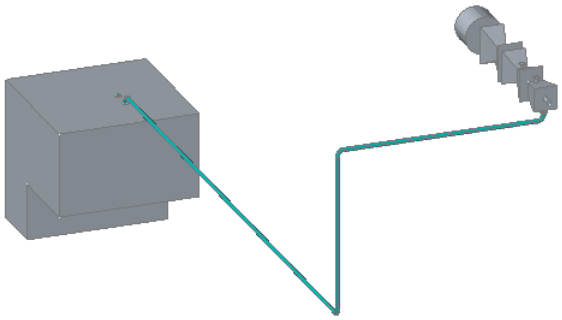

Figure P-101 *Pipe added between bottom outlet nozzle of the High Pressure Turbine and inlet nozzle of the Reheater unit on the Boiler*

Next, connect the outlet nozzle of the Reheater with the nozzle at top center of the Intermediate Pressure Turbine. To do so, choose the **Route New Line** tool from the **Line Number Selector** drop-down of the **Part Insertion** panel; the **Assign Tag** dialog box is displayed. Enter **3006** in the **Number** edit box in this dialog box. Select the line size as **10”** from the **Size** drop-down list. Next, choose the **Assign** button; the **Assign Tag** dialog box is closed and you are prompted to specify the start point of the pipe. Press and hold the SHIFT key and right-click to display a shortcut menu. Choose the **Node** option from the shortcut menu displayed and then select the node of the outlet nozzle of the Reheater unit; you are prompted to specify the next point. Move the cursor vertically upwards and enter **50’** at the command prompt; you are prompted to specify the next point. Next, select the node of the nozzle at top center of the Intermediate Pressure Turbine. In the command prompt, click on the **Next** option once and then choose the **Accept** option. The pipe connected should look like the one shown in Figure P-102.

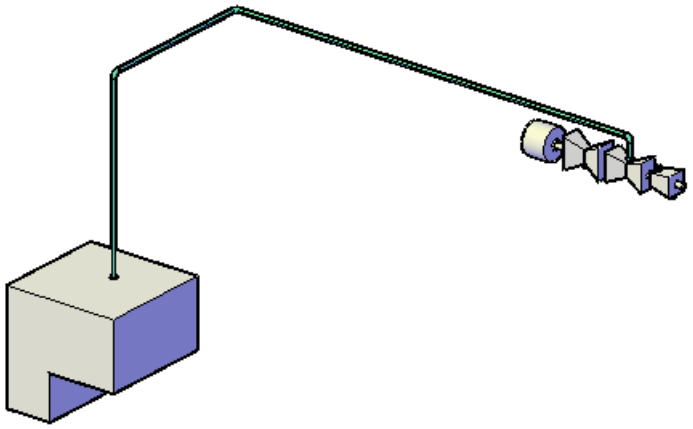

Figure P-102 *Pipe added between outlet nozzle of the Reheater and inlet nozzle of the Intermediate Pressure Turbine*

After adding all the pipings, the plant model should look similar to the one shown in Figure P-103.

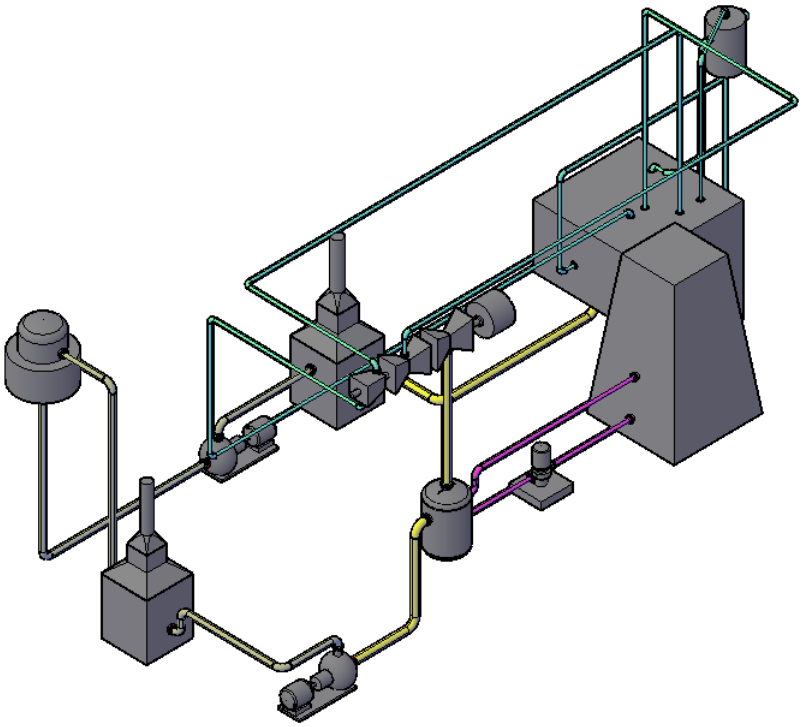

Figure P-103 NE Isometric *view of the plant model after adding pipes*

ADDING VALVES

After making all the piping connections, you need to add valves to the plant model. First, you will add Gate Valves to the model. To do so, choose **Gate Valve, FL, RF, 150** from the **Valve** area in the **Dynamic Pipe Spec** tab of the **TOOL PALETTES**; you are prompted to specify the insertion point. Click on the midpoint of the pipe connecting the High Pressure Heater and the Boiler, refer to Figure P-104; you are prompted to specify the rotation angle. Enter 0 at the command prompt and then press the ESC key, the valve is placed at the required location.

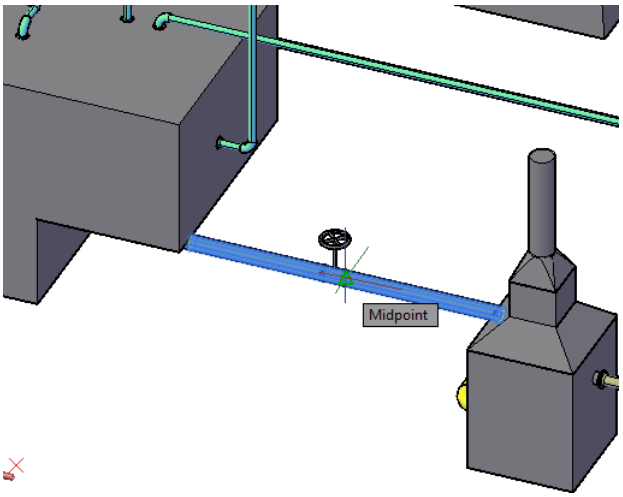

Figure P-104 *Placing Gate Valve on the pipe*

Again, choose **Gate Valve, FL, RF, 150** from the **Valve** area and follow the same procedure to place it on the midpoints of the pipes numbered **3004** and **3006**. Figure P-105 shows the valves placed at the required locations.

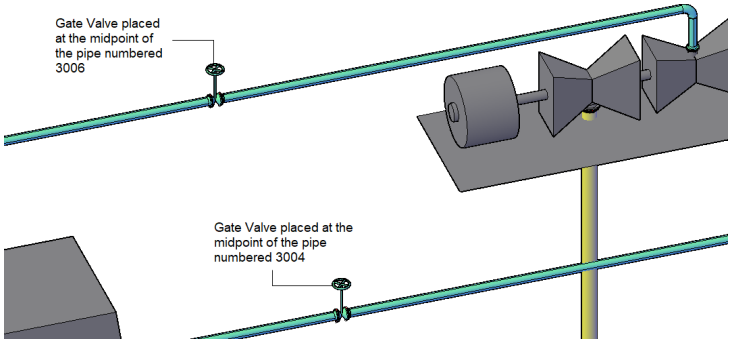

Figure P-105 *Gate Valves placed on pipes numbered **3004** and **3006***

Next, you need to place control valves on the same pipelines (numbered **3004** and **3006**). To do so, choose **Control Valve, Ball, WF, RF, 150** from the **Valve** area in the **Dynamic Pipe Spec** tab of the **TOOL PALETTES**; you are prompted to specify the insertion point. Specify the insertion point for both the control valves at some distance from the previously placed gate valves. Refer to Figure P-106 for the location of control valves to be placed on the pipelines.

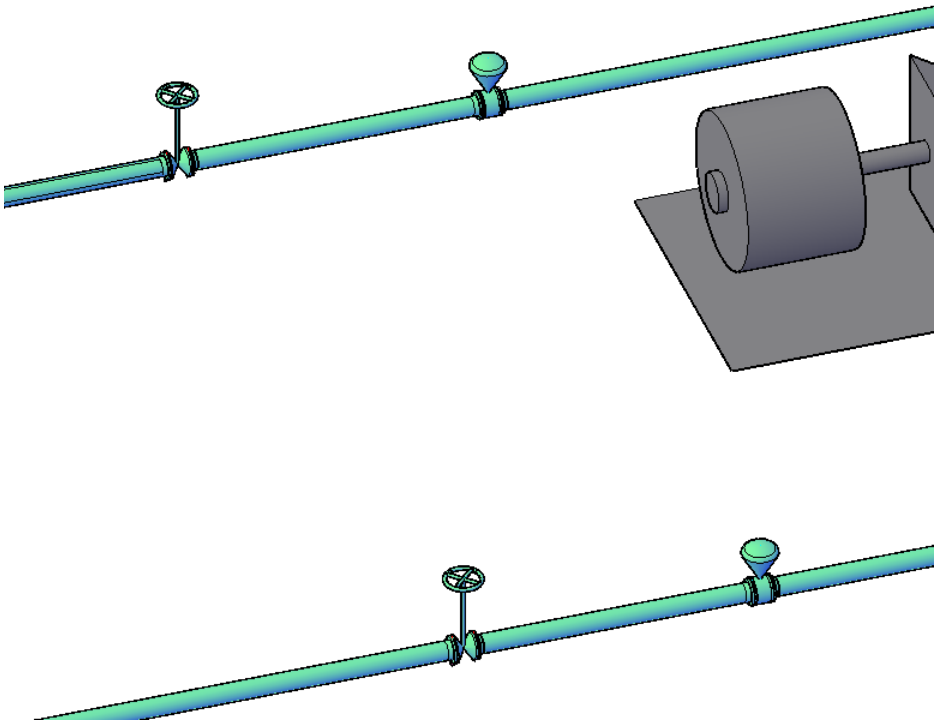

Figure P-106 *Control Valves placed on pipes numbered* ***3004*** *and* ***3006***

ADDING STRUCTURES AND SUPPORTS

Now, you need to add structures and supports to the equipment which are above ground level. First, you will add a structure that will hold the Turbine and Generator unit. To do so, invoke the **RECTANGLE** tool; you are prompted to specify the first corner point. Enter **52', -128', 3'5"** at the command prompt, you are prompted to specify the other corner point. Enter @**44', -15'** at the command prompt; a rectangle is created at the specified location. Next, choose the **Plate** tool from the **Parts** panel of the **Structure** tab; the **Create Plate/Grate** dialog box is displayed. Refer to Figure P-107 for the values to be entered in the **Create Plate/Grate** dialog box.

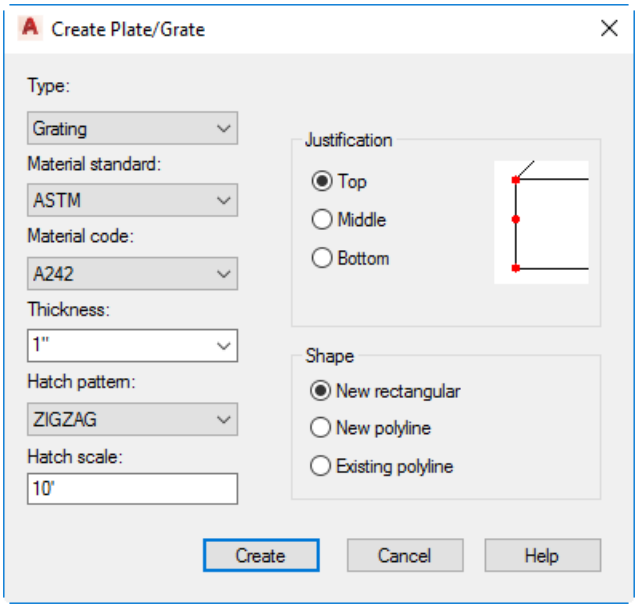

Figure P-107 *Values to be entered in the* ***Create Plate/Grate*** *dialog box*

After entering all the values in the **Create Plate/Grate** dialog box, choose the **Create** button in it; you are prompted to specify the first corner point of the grate. Specify the first point of the rectangle created earlier as the first corner point; you are prompted to specify the other corner point. Specify the diagonally opposite corner point of the rectangle as the second corner point; a grate will be created as shown in Figure P-108.

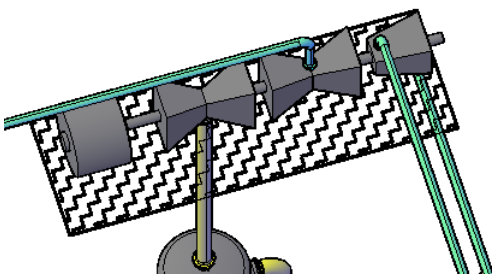

Figure P-108 ***Grate*** *created below the Turbine and Generator unit*

Next, you need to add structural members to the grate. To do so, choose the **Line Model** option from the **Line Model** drop-down list in the **Parts** panel of the **Structure** tab. Next, choose the **Member** tool from the **Parts** panel; the **Specify start point of structural member or [Line Settings]:** prompt is displayed at the command prompt. Choose the **Settings** option from the command prompt; the **Member Settings** dialog box is displayed. Next, choose **W** and **W16x40** from the **Shape type** and **Shape size** list boxes, respectively and then choose the **OK** button to exit the **Member Settings** dialog box; you are prompted again to specify the start point of the structural member. Refer to Figure P-109 for the start point of the structural member. After specifying the start point, you are prompted to specify the endpoint of the structural member. Move the cursor vertically down and enter **70'** at the command prompt; the structural member

is placed at the required location. Next, choose the **Shape Model** option from the **Line Model** drop-down list in the **Parts** panel of the **Structure** tab; you will notice that the structural member is not properly aligned to the Grate. To fix it, select the structural member and right-click; a shortcut menu is displayed. Next, choose the **Edit Structure** option from the shortcut menu; the **Edit Member** dialog box is displayed. In this dialog box, choose the top right justification point in the **Orientation** window and then choose the **OK** button; the structural member is properly aligned to the Grate. Similarly, add the structural members to the remaining corners of the Grate. After adding the structural members to the Grate, it should look similar to the one shown in Figure P-110.

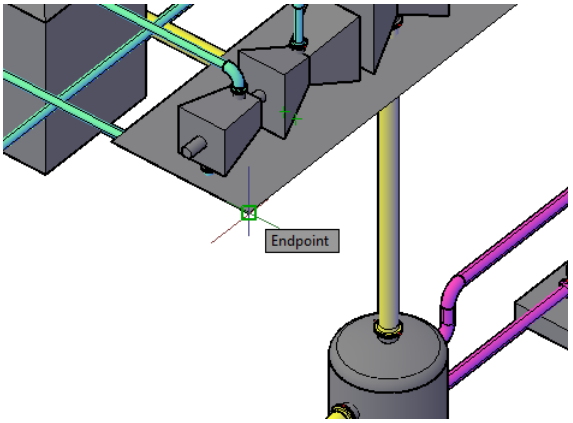

Figure P-109 *Start point of the structural member*

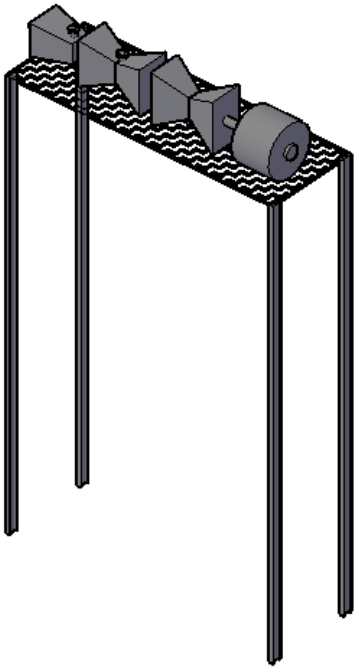

Figure P-110 *Grate after adding structural members*

Next, you need to add Grate and structural members to support the Condenser. To do so, type **RECTANGLE** at the command prompt and press ENTER; you are prompted to specify the first corner point. Enter **77',-140',-46'** at the command prompt; you are prompted to specify the other corner point. Enter @**-14',12'** at the command prompt; a rectangle is created at the specified location. Next, choose the **Plate** tool from the **Parts** panel of the **Structure** tab; the **Create Plate/Grate** dialog box is displayed. Refer to Figure P-107 for the values to be entered in this dialog box. After entering all the values in the **Create Plate/Grate** dialog box, choose the **Create** button in it; you are prompted to specify the first corner point of the Grate. Specify the first point of the rectangle created earlier as the first corner point; you are prompted to specify the other corner point. Specify the diagonally opposite corner point of the rectangle as the second corner point; a grate is created as shown in Figure P-111.

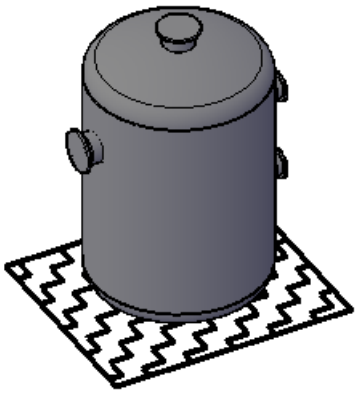

Figure P-111 Grate *created below the Condenser unit*

Next, follow the same procedure explained earlier to add structural members to the Grate. The member length in this case is **20'8"** (Vertically Downwards). After adding structural members to the Grate, it should look similar to the one shown in Figure P-112.



Note

The values to be entered in the ***Create Plate/Grate*** *and* ***Member Settings*** *dialog boxes will remain same as mentioned before for all the gratings and structural members to be added further.*

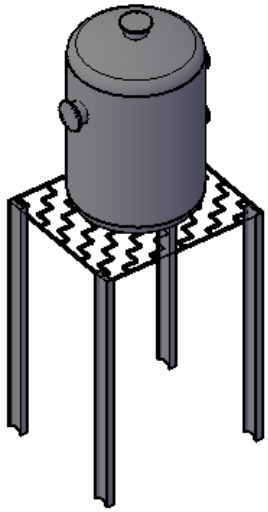

Figure P-112 *Grate after adding structural members*

Similarly, add Gratings and structural members to the Vertical Inline Pump, Deaerator, and the Boiler Drum. The values required to do so are given below.

For Vertical Inline Pump
First corner point of rectangle: **37'6",-128'6",-45'**
Other corner point of the rectangle: @**11',-11'**
Member length: **21'8"** (Vertically Downwards)

For Deaerator
First corner point of rectangle: **108',-194',-15'**
Other corner point of the rectangle: @**18',-18'**
Member length: **51'8"** (Vertically Downwards)

For Boiler Drum
First corner point of rectangle: **-61',-176',-14'**
Other corner point of the rectangle: @**10',-10'**
Member length: **52'8"** (Vertically Downwards)

After adding the gratings and structural members to the Vertical Inline Pump, the Deaerator, and the Boiler Drum, they should look similar to the ones shown in Figures P-113, P-114, and P-115, respectively.

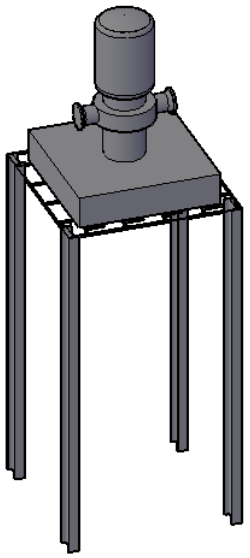

Figure P-113 *Vertical Inline Pump after adding grate and structural members*

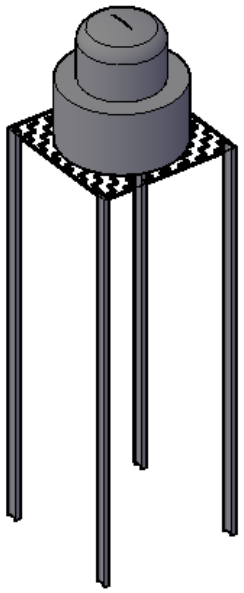

Figure P-114 *Deaerator after adding grate and structural members*

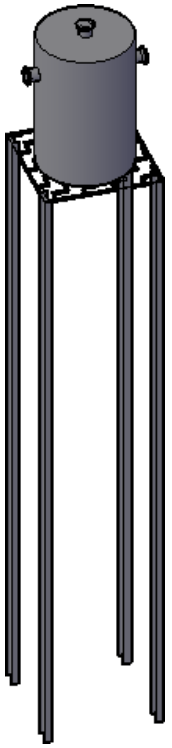

Figure P-115 *Boiler Drum after adding grate and structural members*

Next, you need to add support to the Cooling Tower. To do so, type **RECTANGLE** at the command prompt and press enter; you are prompted to specify the first corner point. Enter **-11',-117',-45'** at the command prompt; you are prompted to specify the other corner point. Enter @**32'6",-33'** at the command prompt; a rectangle is created at the specified location. Next, type **EXTRUDE** at the command prompt; you are prompted to select the objects to extrude. Select the rectangle created earlier and press ENTER; you are prompted to specify the height of extrusion. Enter **-21'8"** at the command prompt; a box is placed below the Cooling Tower.

Next, choose the **Attach Equipment** tool from the **Equipment** panel of the **Home** tab; you are prompted to select a single equipment item. Select the Cooling Tower; you are prompted to select objects. Select the box created earlier and press ENTER; it will get attached with the Cooling Tower.

After adding support to the Cooling Tower, it should look like the one shown in Figure P-116.

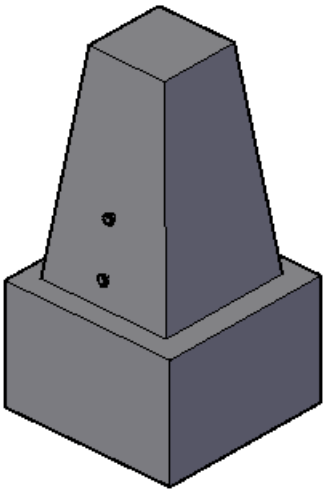

Figure P-116 *Cooling Tower after adding support*

ADDING LADDERS AND RAILINGS

After adding gratings and structural members to the equipment, you need to add ladders to them. First, you will add ladder to the Turbine and Generator unit. To do so, choose the **Line Model** option from the **Line Model** drop-down list in the **Parts** panel of the **Structure** tab. Also, make sure that **UCS** is set to **World**. Next, type **LINE** at the command prompt; you are prompted to specify the start point of the line. Snap the cursor to the mid point of the edge of the grating and click to specify the first point, refer to Figure P-117; you are prompted to specify the next point (second point). Next, drag the cursor vertically downwards (-ve Z-direction) and enter **70'** in the command prompt; you are prompted to specify the next point (third point). Again, drag the cursor in +ve Y-direction and enter **6"** at the command prompt. The line drawn should be similar to one shown in Figure P-117.

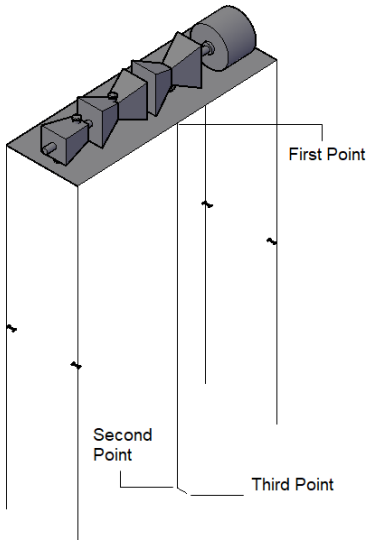

Figure P-117 *Line added to the grating*

Next, choose the **Ladder Settings** tool from the **Structural Settings** drop-down of the **Parts** panel of the **Structure** tab; the **Ladder Settings** dialog box is displayed with the **Ladder** tab chosen. Figures P-118 and P-119 show the values to be entered in the **Ladder Settings** dialog box when the **Ladder** and **Cage** tabs are chosen, respectively.

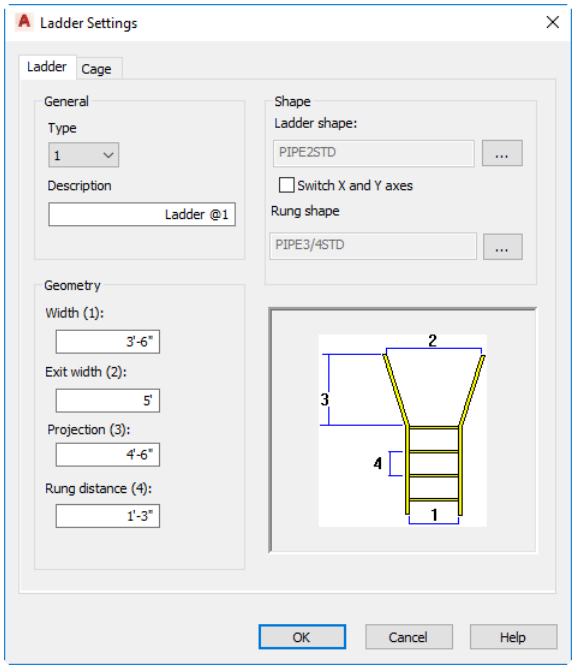

Figure P-118 *Values to be entered in the **Ladder** tab of the **Ladder Settings** dialog box*

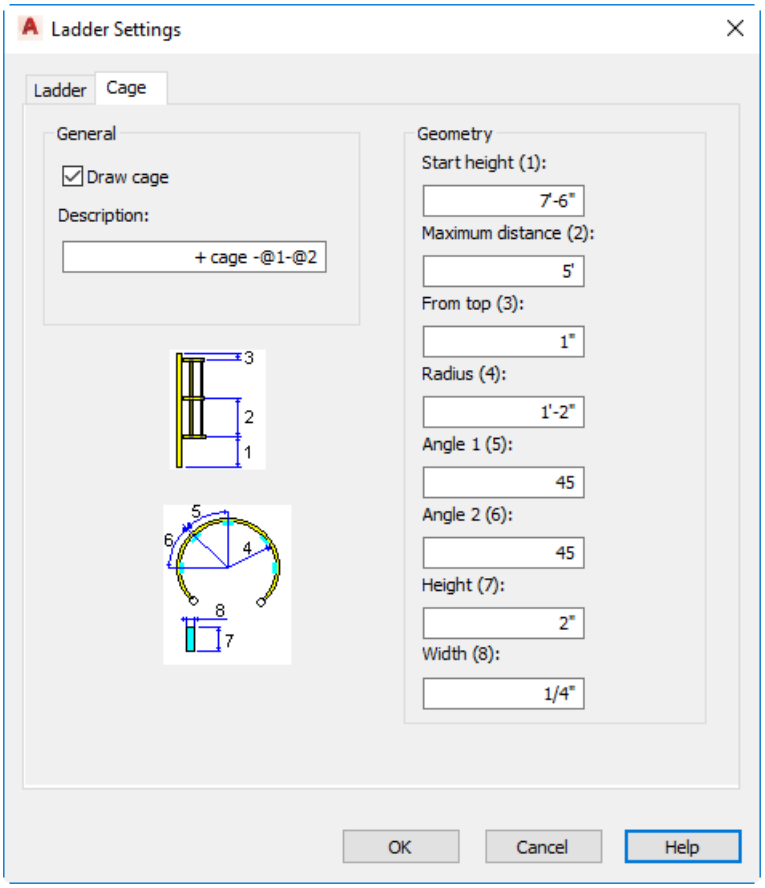

Figure P-119 *Values to be entered in the* ***Cage*** *tab of the* ***Ladder Settings*** *dialog box*

After entering all the values in both the tabs, choose the **OK** button to exit the **Ladder Settings** dialog box. Next, choose the **Ladder** tool from the **Parts** panel of the **Structure** tab; you are prompted to specify the start point of the ladder. Click on the first point of the line drawn earlier, refer to Figure P-117; you are prompted to specify the end point of the ladder. Click on the second point of the line, refer to Figure P-117; you are prompted to specify the directional distance point. Click on the third point of the line, refer to Figure P-117; a ladder is placed at the specified location. Next, choose the **Shape Model** option from the **Line Model** drop-down list of the **Parts** panel. The ladder placed should look similar to the one shown in Figure P-120.

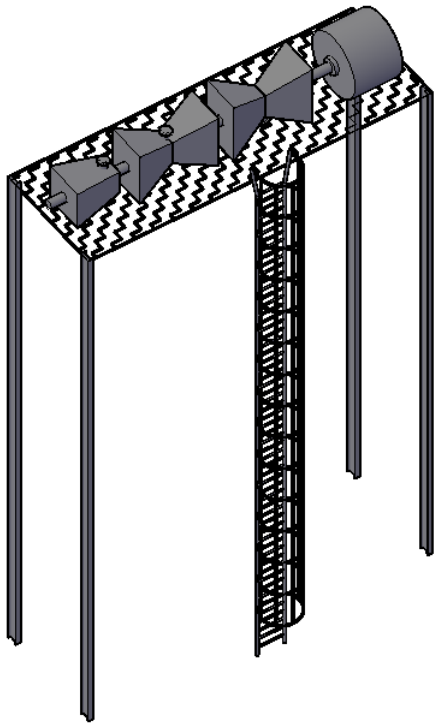

Figure P-120 *Ladder added to the Turbine and Generator unit*

Now, you need to add Railing to the Grating created for Turbine and Generator unit. To do so, choose the **Line Model** option from the **Line Model** drop-down list in the **Parts** panel of the **Structure** tab. Next, choose the **Railing Settings** tool from the Structural Settings drop-down of the **Parts** panel of the **Structure** tab; the **Railing Settings** dialog box is displayed. Refer to the Figure P-121 for the values to be entered in the **Railing Settings** dialog box. After entering all the values, choose the **OK** button to exit the **Railing Settings** dialog box. Next, choose the **Railing** tool from the **Parts** panel; you are prompted to specify the start point of the railing. Specify the start point of the railing, refer to Figure P-122; you are prompted to specify the end point. Click on the second, third, fourth, fifth, and sixth points successively; a railing is added to the grating. Next, choose the **Shape Model** option from the **Line Model** drop-down list of the **Parts** panel. After adding the railing, the Turbine and Generator unit should look similar to the one shown in Figure P-123.

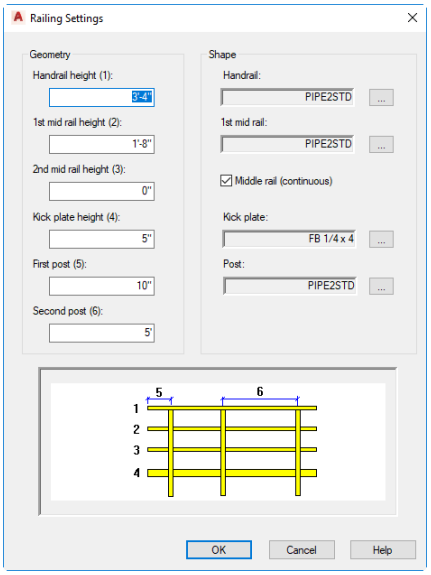

Figure P-121 *Values to be entered in the* ***Railing Settings*** *dailog box*

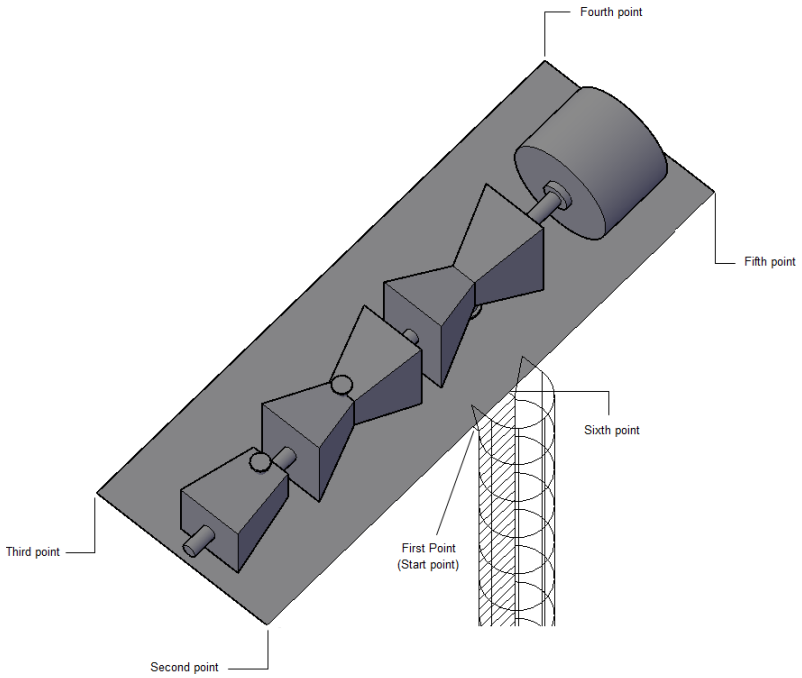

Figure P-122 *Points to be selected while adding the Railing*

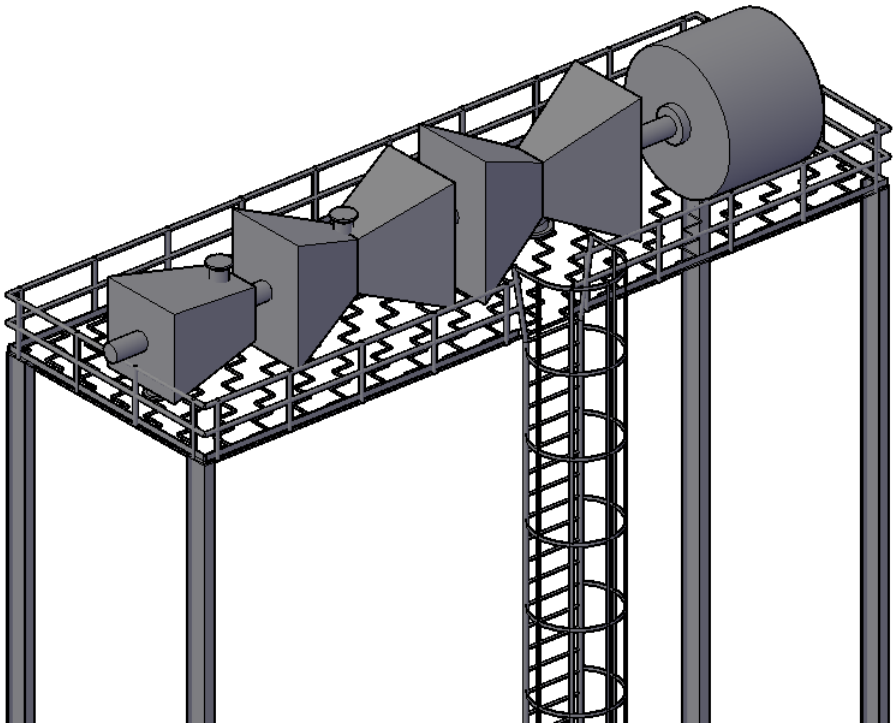

Figure P-123 *Railing added to the Turbine and Generator unit*

Similarly, add ladders and railings to the Condenser, Vertical Inline Pump, Deaerator, and the Boiler Drum.

Note

*The values to be entered in the **Ladder Settings** and **Railing Settings** dialog boxes will remain same for all the ladders to be added to the remaining equipment mentioned above. Also, the directional distance point value will remain same **(6")** while adding ladders.*

Tip

The directional distance point will always lie away from the equipment to which the ladder is to be added.

After adding ladder and railing to the Condenser, it should look similar to the one shown in Figure P-124. Note that the ladder to be added to the Condenser should start from the midpoint of the edge of the grate facing the High Pressure Heater and should be upto the ground level.

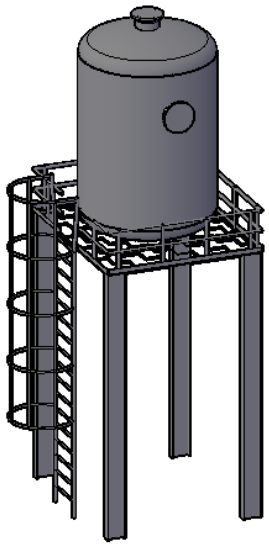

Figure P-124 *Condenser after adding ladder and railing*

After adding ladder and railing to the Vertical Inline Pump, it should look similar to the one shown in Figure P-125. Note that the ladder to be added to the Vertical Inline Pump should start from the midpoint of the edge of the grate facing the High Pressure Heater and should be upto the ground level.

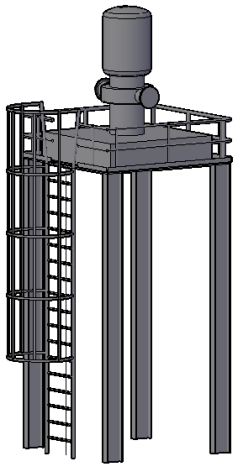

Figure P-125 *Vertical Inline Pump after adding ladder and railing*

After adding ladder and railing to the Deaerator, it should look similar to the one shown in Figure P-126. Note that the ladder to be added to the Deaerator should start from the midpoint of the edge of the grate which does not face any of the equipment and should be upto the ground level.

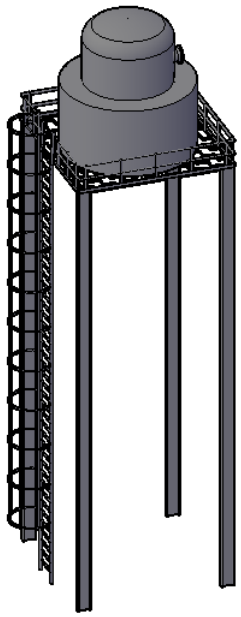

Figure P-126 *Deaerator after adding ladder and railing*

After adding ladder and railing to the Boiler Drum, it should look similar to the one shown in Figure P-127. Note that the ladder to be added to the Boiler Drum should start from the midpoint of the edge of the grate facing the Cooling Tower and should be upto the ground level.

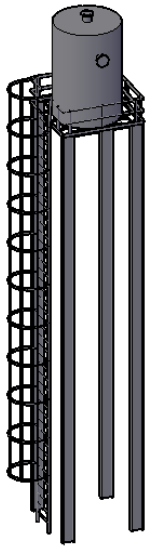

Figure P-127 *Boiler Drum after adding ladder and railing*

Figure P-128 shows the final model of the Thermal Power Plant.

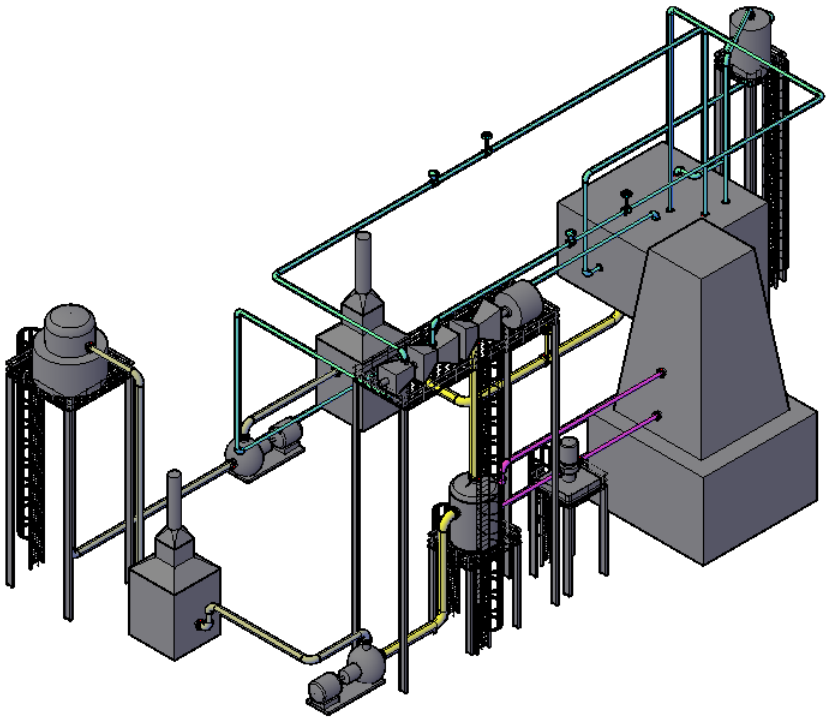

Figure P-128 *Final model of the Thermal Power Plant*

CREATING ISOMETRIC DRAWINGS

In this section, you will create isometric drawings for the pipelines numbered 1007,3004, and 3006.

Creating Quick Isometric Drawing for Line Number 1007

Now, you need to create the Quick Isometric drawing of the pipe numbered 1007 which connects the High Pressure Heater and the Boiler. Zoom into the pipeline connecting the High Pressure Heater and the Boiler and hover the cursor on the pipe, the line number of pipe is displayed, refer to Figure P-129.

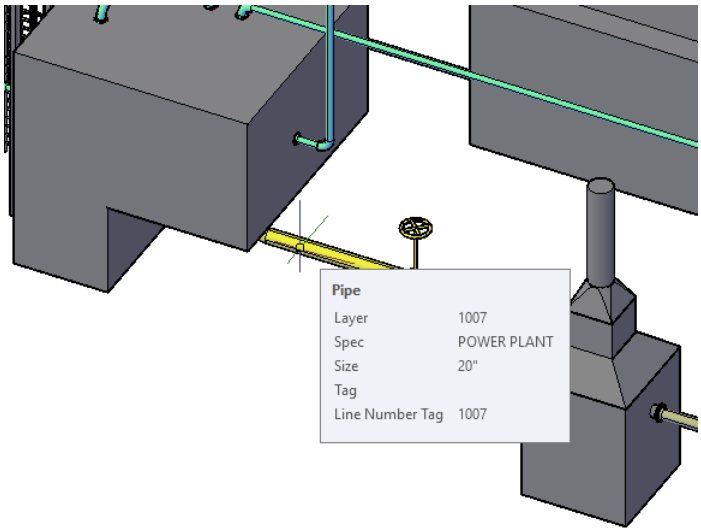

Figure P-129 *Checking the line number of the pipe*

Next, choose the **Quick Iso** tool from the **Iso Creation** panel of the **Isos** tab; you get a prompt as **Select components to ISO or select by [Line number]**. Choose the **Line number** option from the command prompt; the **Create Quick Iso** dialog box is displayed, refer to Figure P-130.

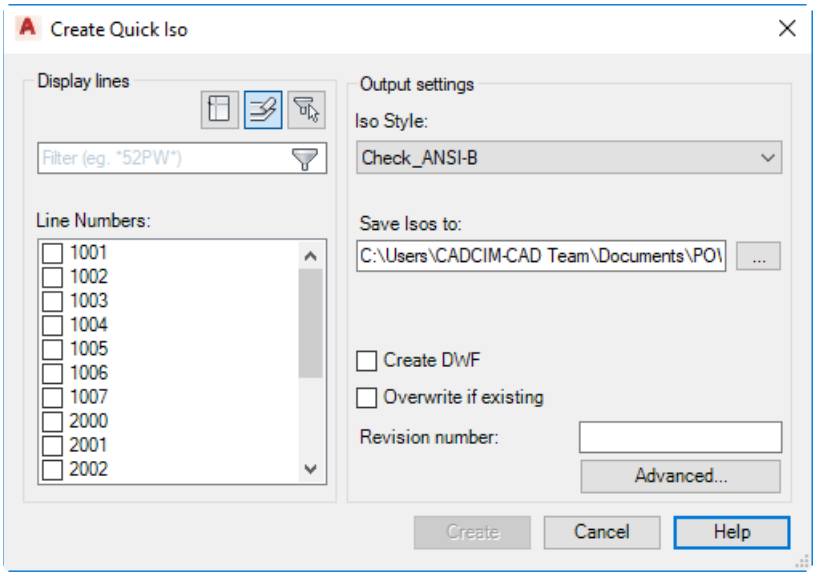

Figure P-130 *The **Create Quick Iso** dialog box*

In this dialog box, select the check box next to the line number **1007** in the **Line Numbers** list box. Next, select the **Check_ANSI-B** option from the **Iso Style** drop-down list in the **Output Settings** area and then choose the Create button; the isometric drawing creation will start. When the drawing creation is complete, a balloon is displayed at the right end of the Status Bar, refer to Figure P-131.

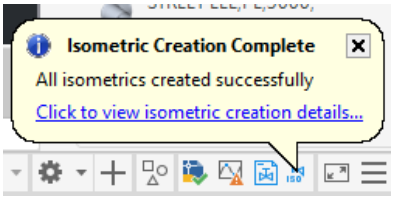

Figure P-131 *Balloon displayed in the Status Bar*

Next, click on the **Click to view isometric creation details** link displayed in the balloon; the **Isometric Creation Results** dialog box is displayed, refer to Figure P-132.

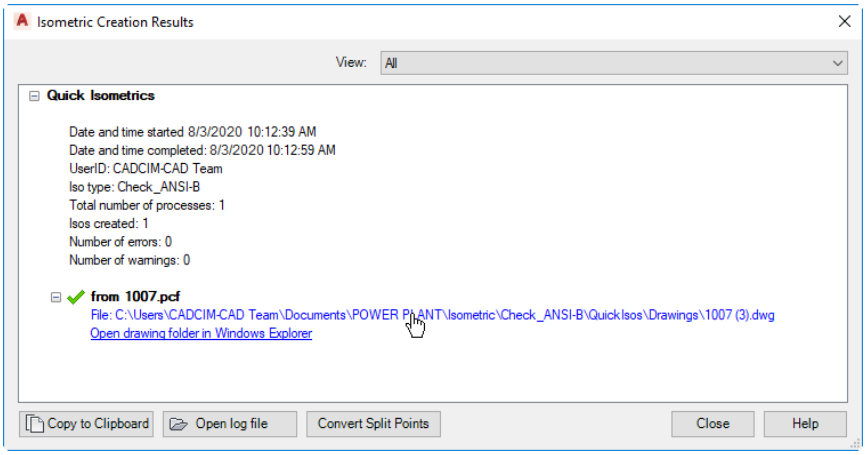

Figure P-132 *The* ***Isometric Creation Results*** *dialog box*

In this dialog box, click on the file path of the isometric drawing, refer to Figure P-132; the isometric drawing is displayed, as shown in Figure P-133.

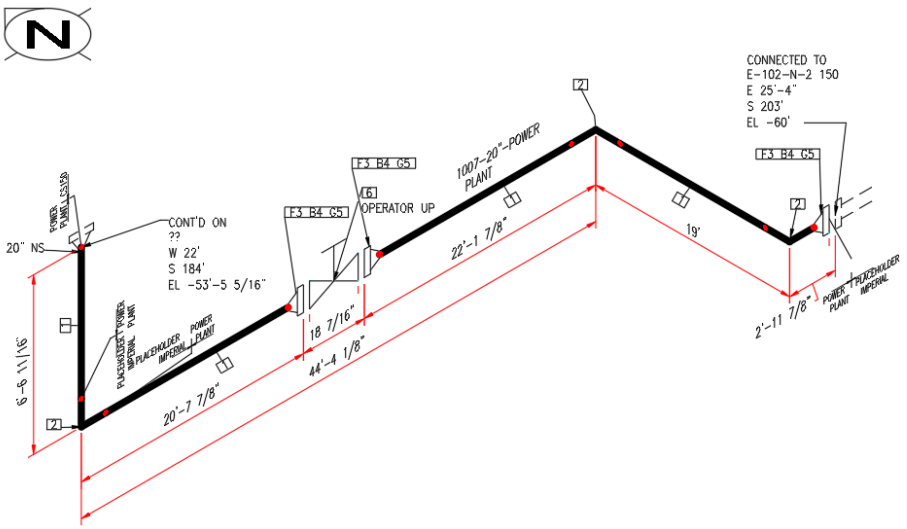

Figure P-133 *Quick isometric drawing for line number* ***1007***

Along with the isometric drawing, the bill of materials will also be displayed, refer to Figure P-134.

BILL OF MATERIALS

ID	QTY	ND	DESCRIPTION
1	55'	20"	PIPE, SEAMLESS, 40, PE, ASTM A106
2	3	20"	PH IMPERIAL ELBOW 90.0°
3	3	20"	FLANGE WN, 150 LB, RF, ASME B16.5
4	72	1.1/4"X8 1/4"	PH IMPERIAL STUD BOLT
5	3	20"	PH IMPERIAL GASKET
6	1	20"	GATE VALVE, CONDUIT, 150 LB, RF, ASME B16.10

Figure P-134 *Bill of Materials for pipe number* ***1007***



Note

Quick Isometric drawings are created only to check the piping before creating a production isometric drawing. Moreover, these drawings are not added to the project and are available for current session only.

Creating Production Isometric Drawing for Line Number 3004

Now, you need to create the Production Isometric drawing of the pipe numbered **3004** which connects the Boiler and the High Pressure Turbine. Zoom into the pipeline connecting the Boiler and the High Pressure Turbine and hover the cursor on the pipe, the line number of the pipe is displayed, refer to Figure P-135.

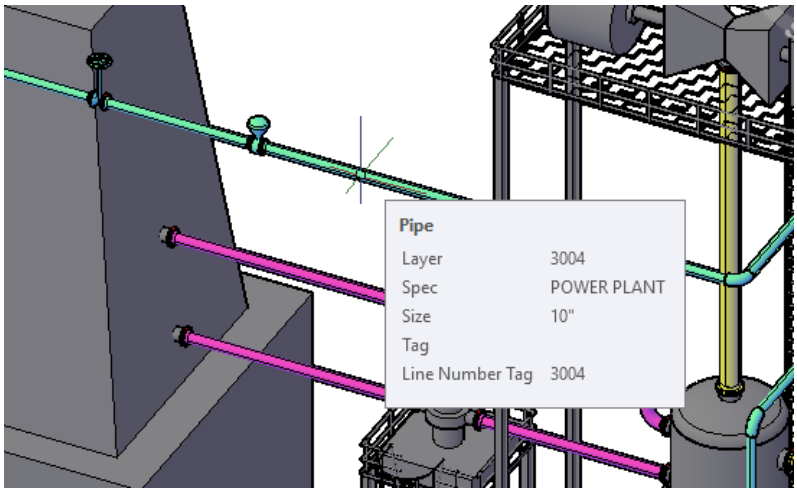

Figure P-135 *Checking the line number of the pipe*

Next, choose the **Production Iso** tool from the **Iso Creation** panel of the **Isos** tab; the **Create Production Iso** dialog box is displayed, refer to Figure P-136.

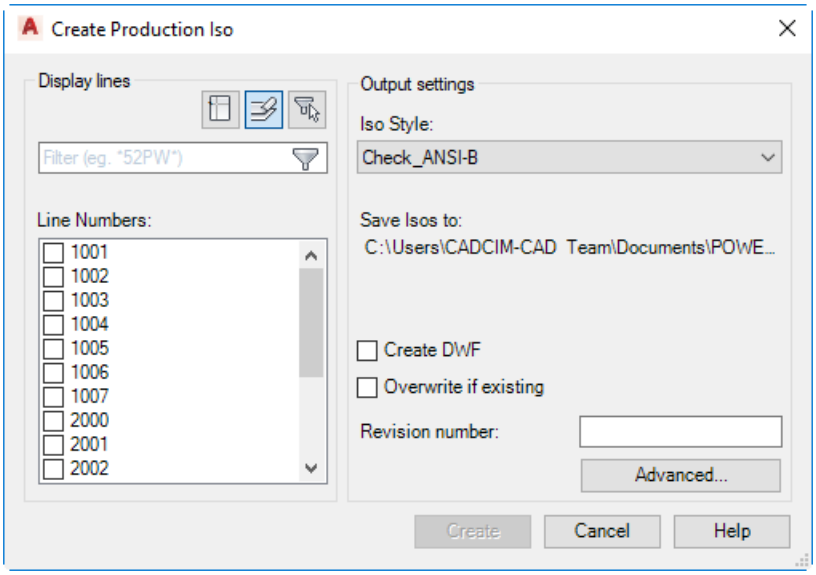

Figure P-136 *The* ***Create Production Iso*** *dialog box*

In this dialog box, select the check box next to the line number **3004** in the **Line Numbers** list box. Next, select the **Final_ANSI-B** option from the **Iso Style** drop-down list in the **Output settings** area and then choose the **Create** button; the isometric drawing creation will start. When the drawing creation is complete, a balloon is displayed at the right end of the Status Bar. Click on the **Click to view isometric creation details** link displayed in the balloon; the **Isometric Creation Results** dialog box is displayed, refer to Figure P-137.

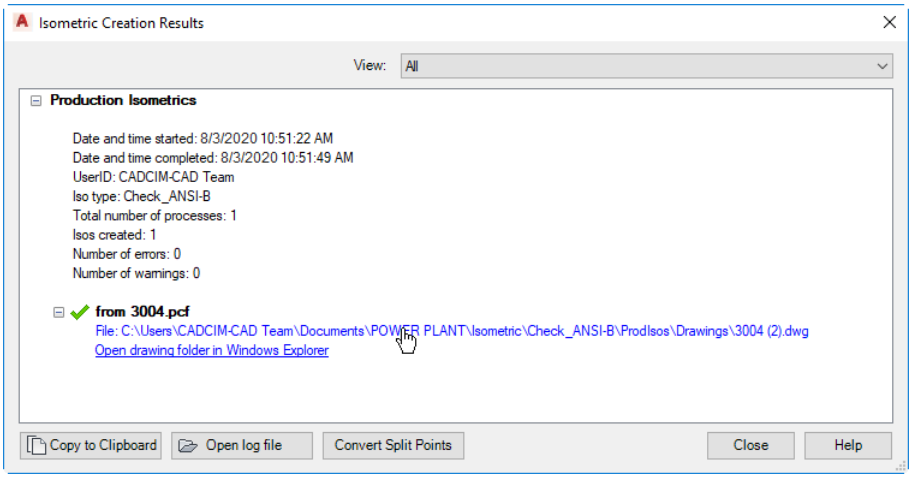

Figure P-137 *The* ***Isometric Creation Results*** *dialog box*

In this dialog box, click on the file path of the isometric drawing, refer to Figure P-137; the isometric drawing is displayed, as shown in Figure P-138.

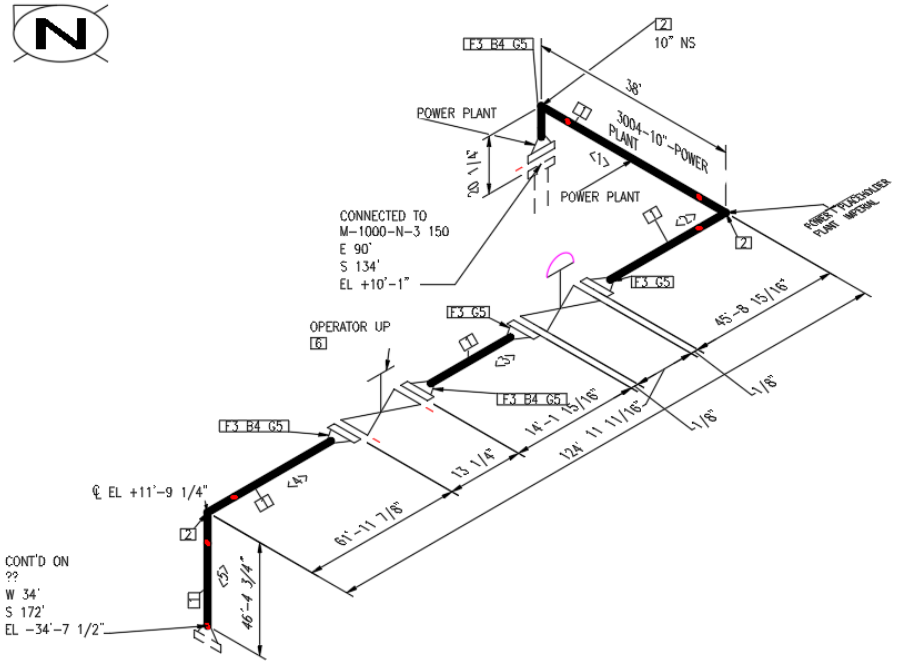

Figure P-138 *Production Isometric drawing for pipe number* ***3004***

Figures P-139 and P-140 show the Bill of Materials and Cut Piece List for pipe numbered **3004**.

BILL OF MATERIALS

ID	QTY	ND	SCH/ CLASS	DESCRIPTION
1	198'-3"	10"	100	PIPE, SEAMLESS, 40, PE, ASTM A106
2	3	10"		PH IMPERIAL ELBOW 90.0°
3	5	10"	150	FLANGE WN, 150 LB, RF, ASME B16.5
4	48	1"X6 1/4"		PH IMPERIAL STUD BOLT
5	5	10"		PH IMPERIAL GASKET
6	1	10"	150	GATE VALVE, CONDUIT, 150 LB, RF, ASME B16.10

Figure P-139 *Bill of Materials for pipe number* ***3004***

CUT PIECE LIST				
ID	LENGTH	ND	END1	END2
1	35'-3 3/4"	10"	UNIVERSAL_ET	UNIVERSAL_ET
2	44'-0 13/16"	10"	UNIVERSAL_ET	BEVEL
3	13'-6"	10"	BEVEL	BEVEL
4	60'-3 3/4"	10"	BEVEL	UNIVERSAL_ET
5	45'-0 11/16"	10"	UNIVERSAL_ET	SQUARE CUT

Figure P-140 *Cut Piece List for pipe number* ***3004***

Creating Production Isometric Drawing for Line Number 3006

Follow the same procedure to create production isometric drawing for pipe numbered **3006**. Note that for this pipeline, the production isometric drawing will split into two drawing files: **3006-1** and **3006-2**. Figure P-141 shows the Production Isometric drawing **3006-1**.

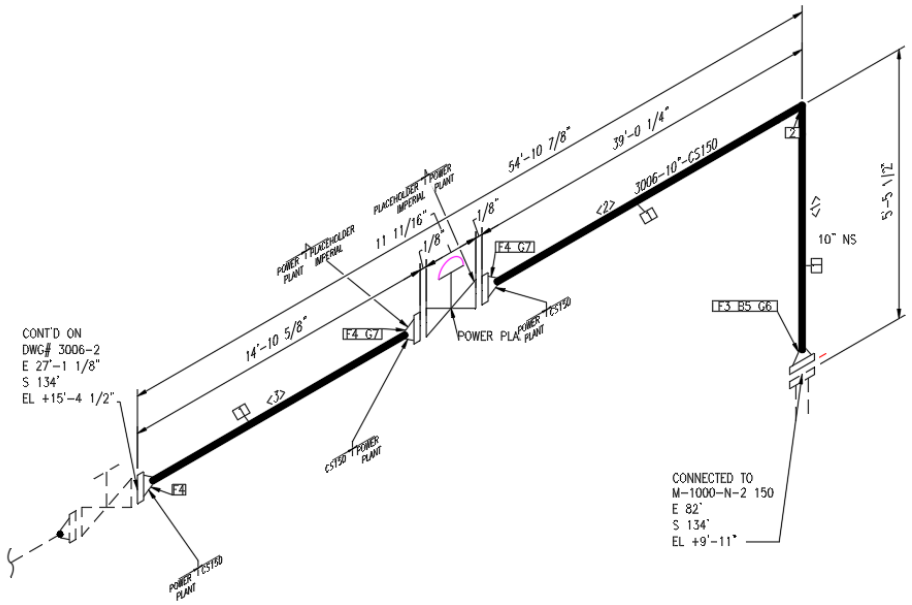

Figure P-141 *Production Isometric drawing* ***3006-1***

Figures P-142 and P-143 show the Bill of Materials and Cut Piece List for **3006-1** isometric drawing.

BILL OF MATERIALS

ID	QTY	ND	SCH/ CLASS	DESCRIPTION
1	55'-7"	10"		PIPE, SEAMLESS, PL, ASME B36.10
2	1	10"		ELL 90 LR, BV, ASME B16.9
3	1	10"	150	FLANGE WN, RF, 150 LB, ASME B16.5
4	3	10"	150	FLANGE WN, 150 LB, RF, ASME B16.5
5	12	7/8"X4 1/2"	150	BOLT SET, RF, 150 LB, STUD BOLT
6	1	10"	150	GASKET, SWG, 1/8" THK, RF, 150 LB, ASME B16.20, CS/PTFE
7	2	10"		PH IMPERIAL GASKET

Figure P-142 *Bill of Materials for* ***3006-1*** *isometric drawing*

CUT PIECE LIST

ID	LENGTH	ND	END1	END2
1	3'-10 7/16"	10"	BEVEL	BEVEL
2	37'-5 1/4"	10"	BEVEL	BEVEL
3	14'-2 11/16"	10"	BEVEL	BEVEL

Figure P-143 *Cut Piece List for* ***3006-1*** *isometric drawing*

Figure P-144 shows the production isometric drawing **3006-2**. Figures P-145 and P-146 show the Bill of Materials and Cut Piece List for **3006-2** isometric drawing.

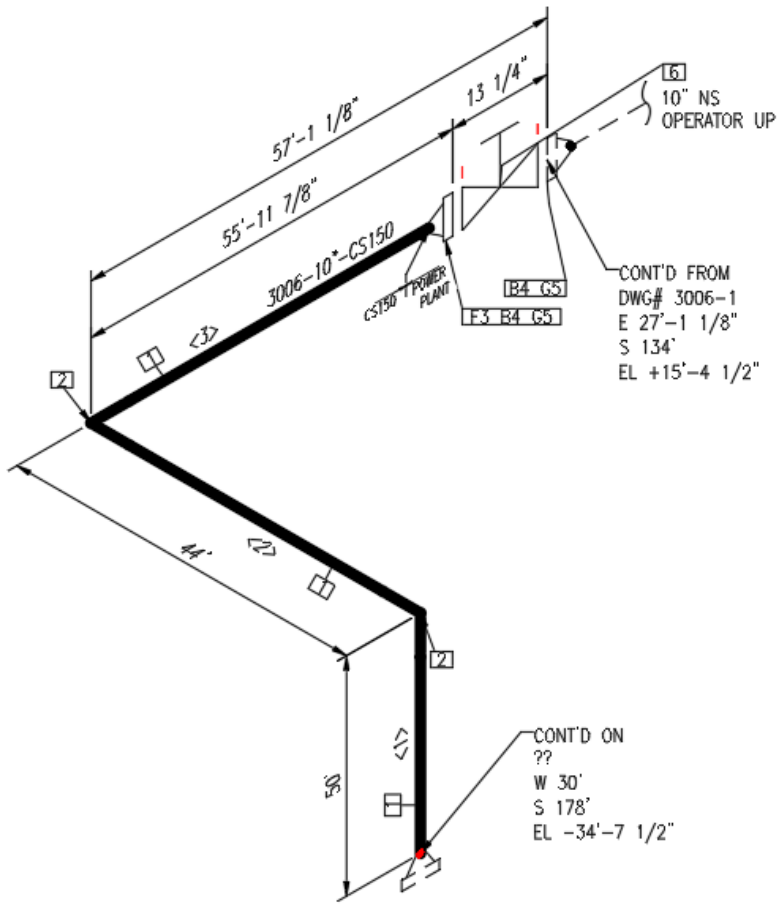

Figure P-144 *Production Isometric drawing* ***3006-2***

BILL OF MATERIALS

ID	QTY	ND	SCH/ CLASS	DESCRIPTION
1	144'-8"	10"		PIPE, SEAMLESS, PL, ASME B36.10
2	2	10"		ELL 90 LR, BV, ASME B16.9
3	1	10"	150	FLANGE WN, 150 LB, RF, ASME B16.5
4	32	1"X6 1/4"		PH IMPERIAL STUD BOLT
5	2	10"		PH IMPERIAL GASKET
6	1	10"	150	GATE VALVE, CONDUIT, 150 LB, RF, ASME B16.10

Figure P-145 *Bill of Materials for* ***3006-2*** *isometric drawing*

CUT PIECE LIST				
ID	LENGTH	ND	END1	END2
1	48'–9"	10"	BEVEL	SQUARE CUT
2	41'–6"	10"	BEVEL	BEVEL
3	54'–4 7/8"	10"	BEVEL	BEVEL

Figure P-146 *Cut Piece List for* ***3006-2*** *isometric drawing*

Next, save and close all the Isometric drawings.

CREATING ORTHOGRAPHIC DRAWINGS

Now, you need to create the Orthographic drawings for the plant model. To do so, choose the **Orthographic DWG** tab from the **PROJECT MANAGER**; the **Orthographic Drawings** node is displayed in the **Orthos** area. Click on the **Orthographic Drawings** node; it is highlighted. Next, right-click on it; a shortcut menu is displayed. Choose the **New Drawing** option from the shortcut menu; the **New DWG** dialog box is displayed. Next, enter **Ortho** in the **name** edit box and choose the **OK** button; a new drawing file is created and the **Ortho View** tab is added to the **Ribbon**.

Note

While creating the Orthographic Views of the plant model, make sure that the orientation of the model is set to ***NE Isometric****.*

First, you will create the Top view of the plant model. To do so, choose the **New View** tool from the **Ortho Views** panel of the **Ortho View** tab; the **Select Reference Models** dialog box is displayed, refer to Figure P-147.

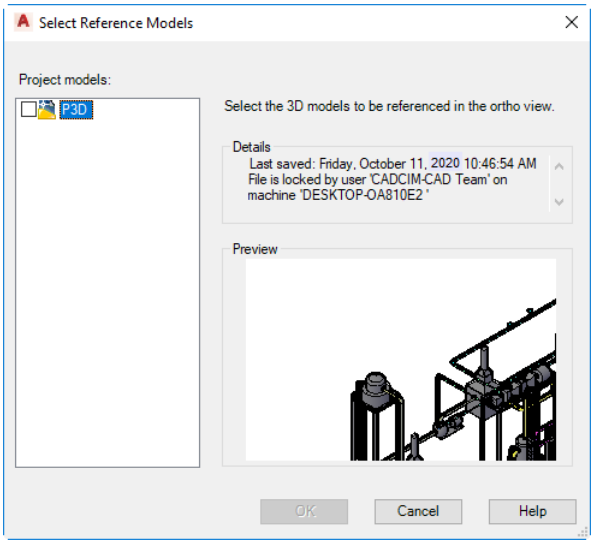

Figure P-147 *The* ***Select Reference Model*** *dialog box*

In this dialog box, select the check box next to the **P3D** model and then choose the **OK** button; the **Ortho Editor** tab is activated and the plant model is enclosed in the Ortho Cube, refer to Figure P-148.

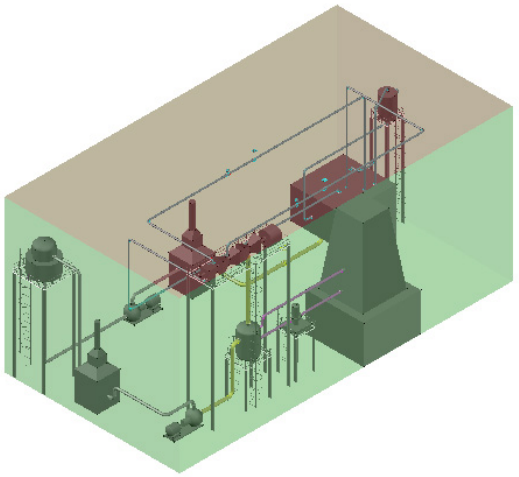

Figure P-148 *Plant model enclosed in the Ortho Cube*

Next, enter **0.006** as the scale factor in the **Scale** edit box of the **Output Size** panel of the **Ortho Editor** tab. Also, make sure that the **Top** option is selected from the drop-down list in the **Ortho Cube** panel of the **Ortho Editor** tab. Next, choose the **OK** button from the **Create** panel of the **Ortho Editor** tab; you are prompted to specify the insertion point of the viewport. Place the view on the top right of the drawing sheet; the **Ortho Generation** window is displayed and the Top view of the plant model is placed in the drawing sheet once the ortho generation is completed. Figure P-149 shows the top view of the plant model.

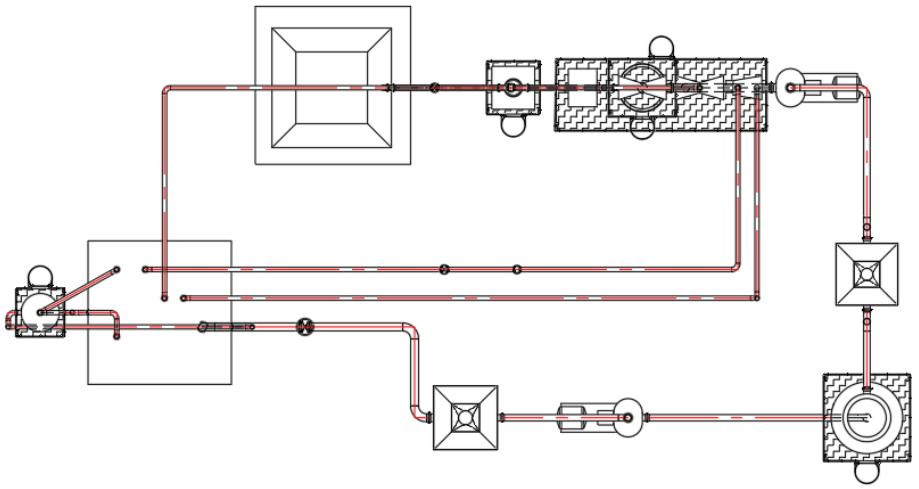

Figure P-149 *Top view of the Plant model*

Next, choose the **Adjacent View** tool from the **Ortho Views** panel of the **Ortho View** tab; you are prompted to select an orthographic view to create an adjacent view. Select the view boundary of the Top view placed earlier; the **Create an Adjacent View** dialog box is displayed, refer to Figure P-150.

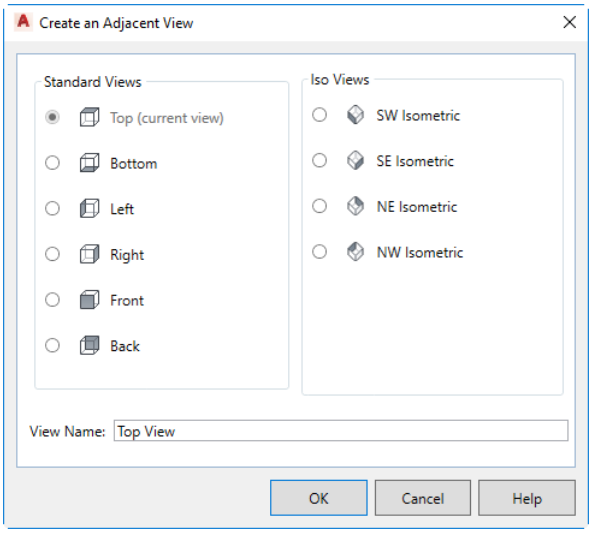

Figure P-150 *The* ***Create an Adjacent View*** *dialog box*

In this dialog box, select the **Front** radio button from the **Standard Views** area and then choose the **OK** button; you are prompted to specify the insertion point of the viewport. Place the front view below the previously created top view and then press ESC to exit the **Adjacent View** tool. Figure P-151 shows the front view of the plant model.

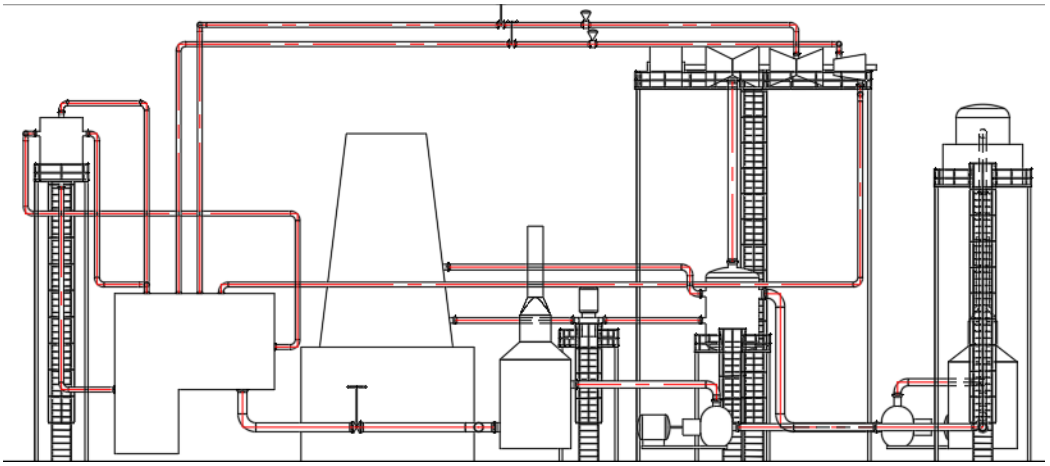

Figure P-151 *Front view of the plant model*

Again, choose the **Adjacent View** tool from the **Ortho Views** panel of the **Ortho View** tab; you are prompted to select an orthographic view to create an adjacent view. Select the view boundary of the front view; the **Create an Adjacent View** dialog box is displayed.

In this dialog box, select the **Left** radio button from the **Standard Views** area and then choose the **OK** button; you are prompted to specify the insertion point of the viewport. Place the left view at the left of the previously created front view and then press ESC to exit the **Adjacent View** tool. Figure P-152 shows the Left view of the plant model.

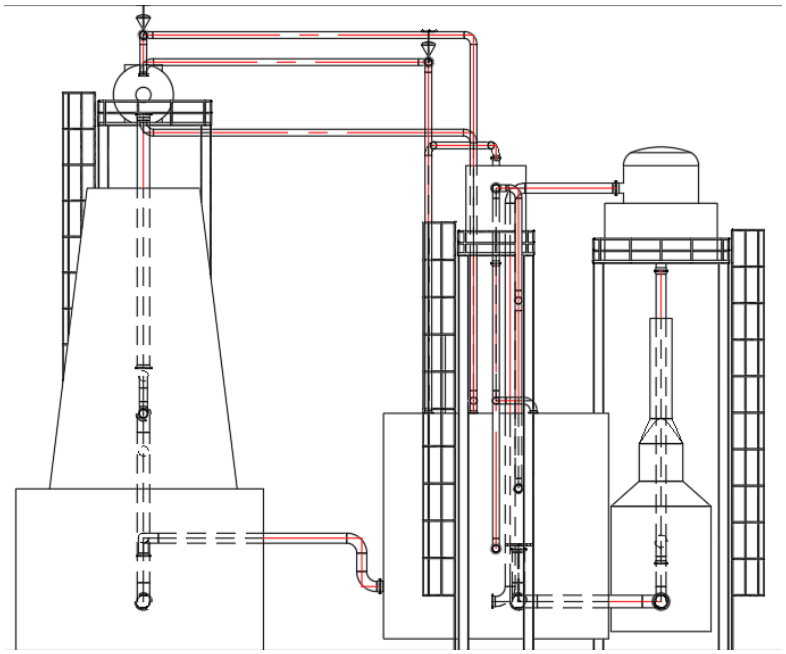

Figure P-152 *Left view of the plant model*

Next, choose the **Adjacent View** tool from the **Ortho Views** panel of the **Ortho View** tab; you are prompted to select an orthographic view to create an adjacent view. Select the view boundary of the top view placed earlier; the **Create an Adjacent View** dialog box is displayed.

In this dialog box, select the **NE Isometric** radio button from the **Iso Views** area and then choose the **OK** button; you are prompted as **Specify insertion point of the viewport or [Scale/Rotate/Existing]**. Choose the **Scale** option from the command prompt; you are prompted to specify the scale. Type **0.0035** at the command prompt and press ENTER. Next, place the view at top left of the drawing sheet. Figure P-153 shows the **NE Isometric** view of the plant model.

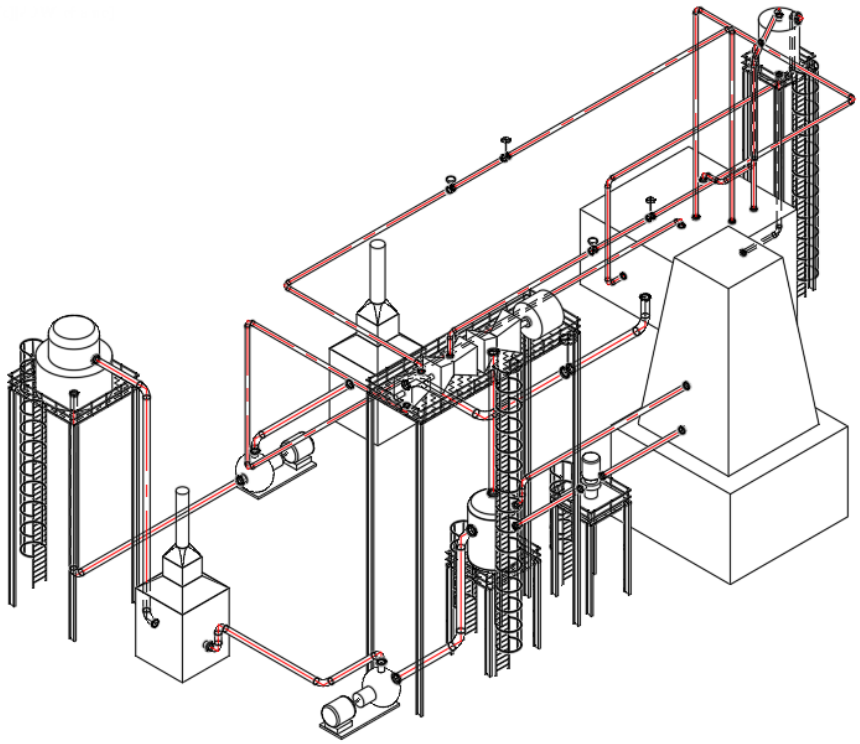

Figure P-153 NE Isometric *view of the plant model*

After placing all the views in the drawing sheet, it should look similar to the one shown in Figure P-154.

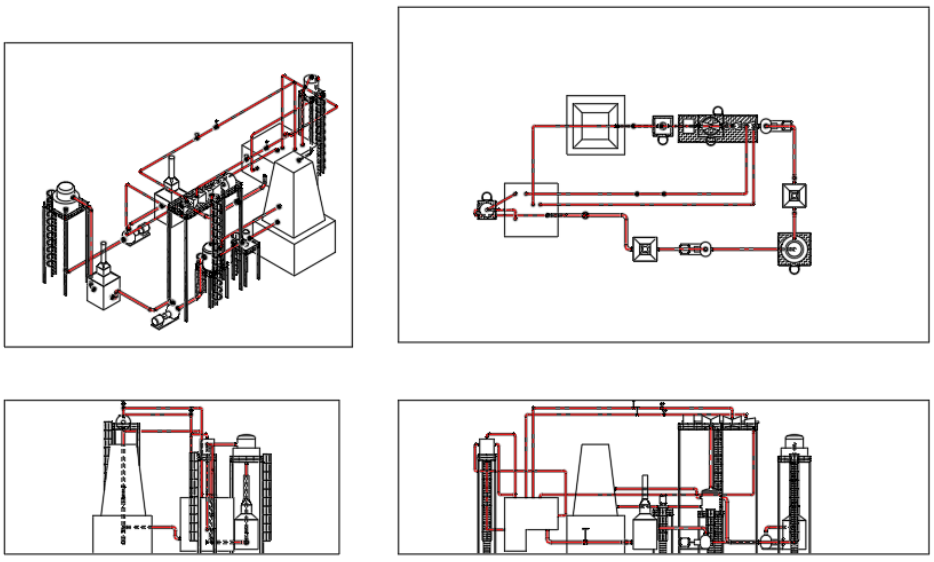

Figure P-154 *Drawing sheet after placing views*

Adding Annotations and Dimensions

First, you will add annotations to the components. To do so, choose the **Ortho Annotate** tool from the **Annotation** panel of the **Ortho View** tab; you are prompted to select a component to annotate. Select the Low Pressure Heater in the top view; you are prompted to specify the annotation style. Press ENTER; the annotation is attached to the cursor and you are prompted to specify the annotation position. Place the annotation at the right of the Low Pressure Heater, refer to Figure P-155.

Next, follow the same procedure to annotate the other equipment in the Top view. Figure P-155 shows the top view of the plant model after adding annotations to the equipment.

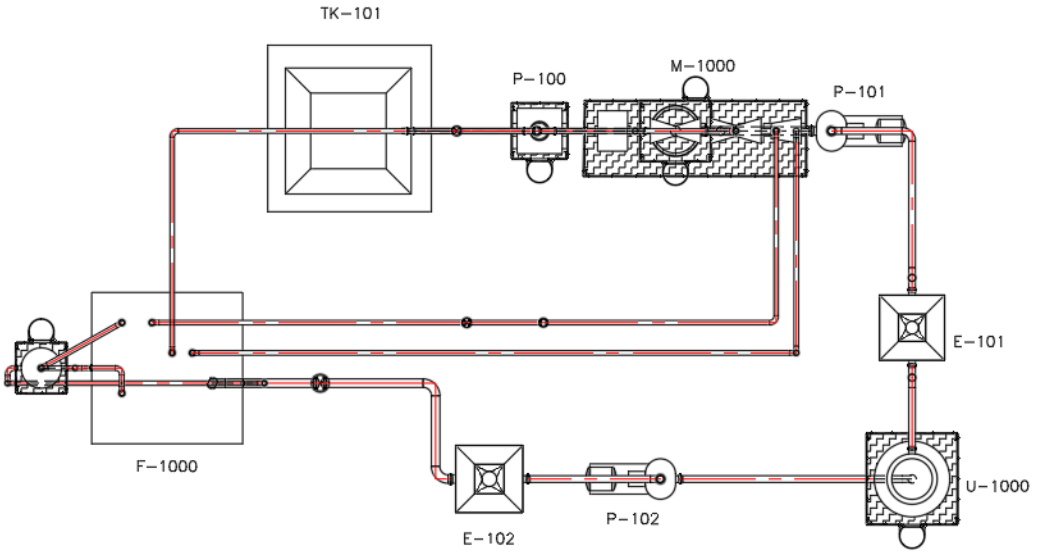

Figure P-155 *Top view after adding annotations*

Now, you will add dimensions to the top view of the plant model. To do so, choose the **Linear** tool from the **Dimension** drop-down of the **Dimensions** panel of the **Ortho View** tab; you are prompted to specify the first line origin. Select the center point of the Deaerator; you are prompted to specify the second extension line origin. Select the center point of the exit nozzle of the Centrifugal Pump 2; the dimension is attached to the cursor. Place the dimension into the drawing area, refer to Figure P-156 for location of the dimension.

Follow the same procedure to add other dimensions to the top view of the plant model. Figure P-156 shows the top view of the model after adding dimensions.

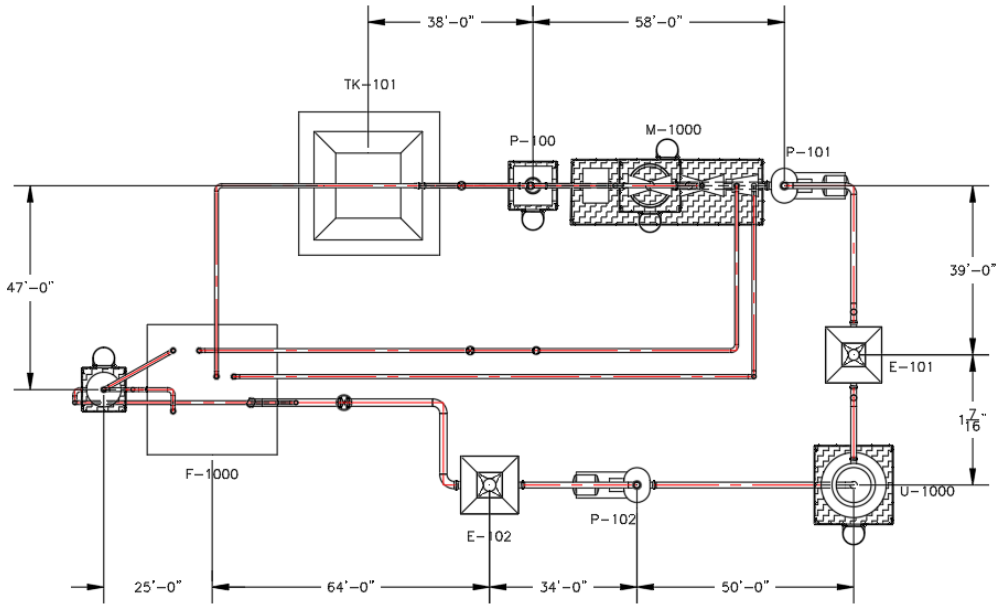

Figure P-156 *Top view after adding dimensions*

Next, save and close the orthographic drawing.

CREATING REPORTS AND MANAGING DATA

In this section, you will manage and create reports of the Thermal Power Plant model. To do so, choose the **Data Manager** button from the **Project** panel of the **Home** tab; the **DATA MANAGER** is displayed, refer to Figure P-157.

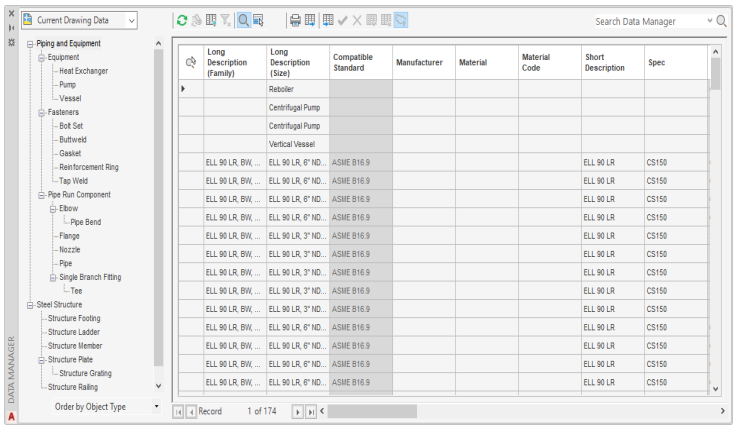

Figure P-157 *The **DATA MANAGER***

In the **DATA MANAGER**, select the **Plant 3D Project Data** option from the drop-down list located at the top-left corner; the Plant 3D project data is displayed. Select the **Equipment** node from the Class tree; the data related to equipment is displayed in the Data table.

Filtering and Exporting the Data

Now, you need to filter and export the data related to a particular equipment. Right-click on **Mechanical Drivers** in the **Long Description(Size)** column of the Data table and choose the **Filter By Selection** option from the shortcut menu displayed, refer to Figure P-158; the data related to **Mechanical Drivers** is displayed in the Data table.

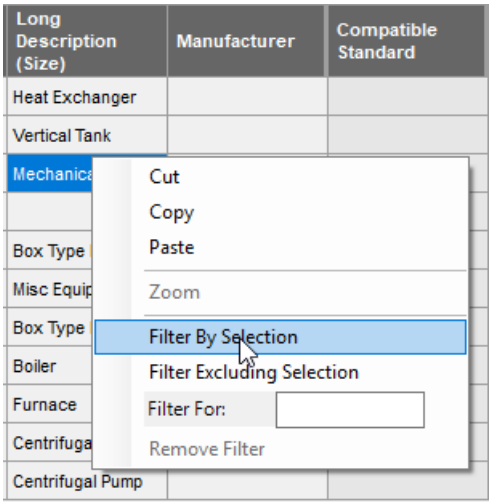

Figure P-158 *Choosing the* ***Filter By Selection*** *option*

Next, choose the **Export** button from the **DATA MANAGER** toolbar; the **Export Data** dialog box is displayed, refer to Figure P-159.

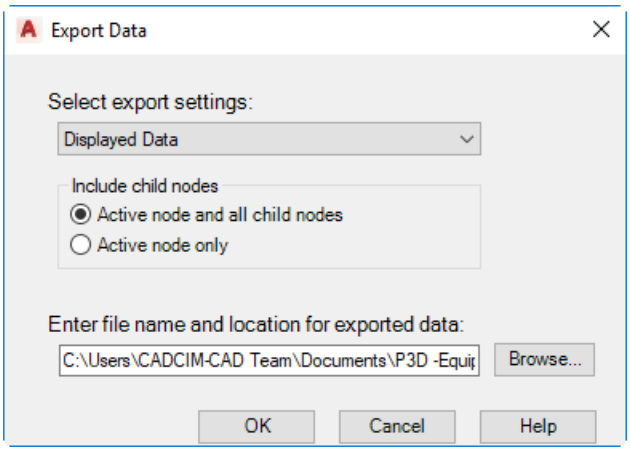

Figure P-159 *The* ***Export Data*** *dialog box*

In this dialog box, select the **Active node only** radio button from the **Include child nodes** area and then choose the **Browse** button; the **Export To** dialog box is displayed, refer to Figure P-160.

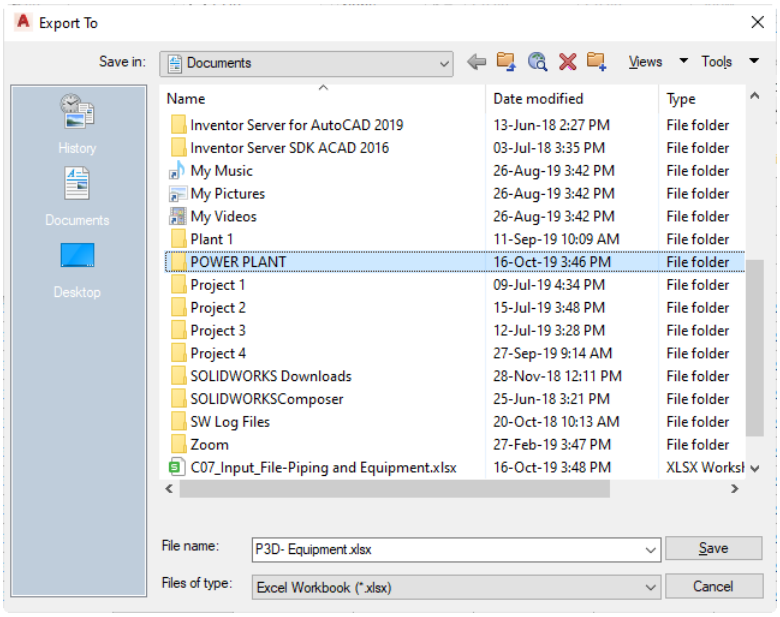

Figure P-160 *The* ***Export To*** *dialog box*

In this dialog box, select the **Excel Workbook (*.xlsx)** option from the **Files of type** drop-down list and specify the file location as C:\Users\User_name\Documents\POWER PLANT. Next, choose the **Save** button to exit the **Export To** dialog box; the **Export Data** dialog box is displayed again. Choose the **OK** button to exit the **Export Data** dialog box. The data is exported to the excel file and it is saved at the specified location.

Modifying the Data

Browse to the location C:\Users\User_name\Documents\POWER PLANT and open the **POWER PLANT- Equipment.xlsx** file; a spreadsheet is displayed, refer to Figure P-161.

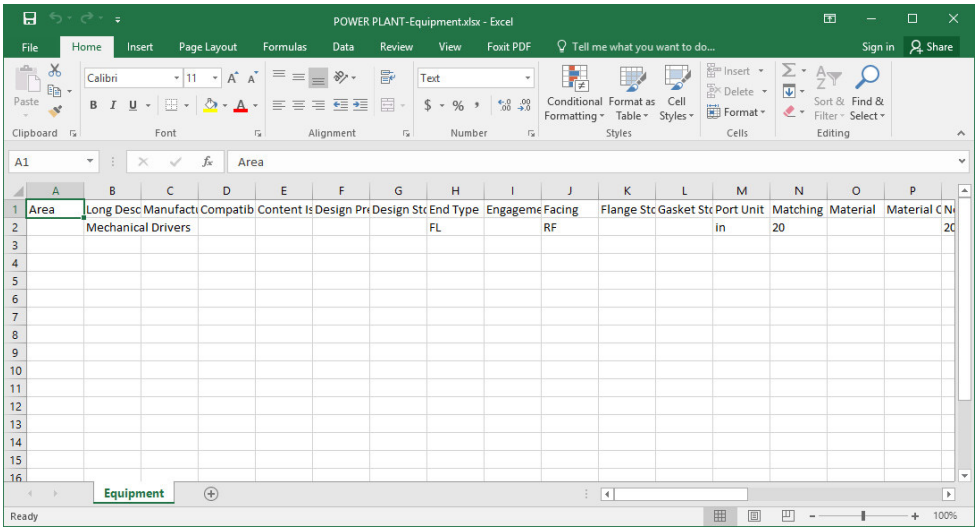

Figure P-161 *Excel Sheet displaying Equipment Data*

In the spreadsheet, change the **Long Description (Size)** from **Mechanical Drivers** to **Turbine**. Figures P-162 and P-163 show the **Long Description (Size)** column before and after editing, respectively.

Area	Long Desc	Manufact	Compatib	Content Is	Design Pr	Design Stc	End Type	Engageme	Facing
	Mechanical Drivers						FL		RF

***Figure P-162 Long Description (Size)** before editing*

Area	Long Desc	Manufact	Compatib	Content Is	Design Pr	Design Stc	End Type	Engageme	Facing
	Turbine						FL		RF

***Figure P-163 Long Description (Size)** after editing*

Next, save the excel file after making all the modifications in it and close it.

Importing the Data

Now, you will import the modified data into the DATA MANAGER. To do so, switch to AutoCAD Plant 3D and open the **DATA MANAGER** if it is closed. In the **DATA MANAGER**, make sure that **Plant 3D Project Data** is selected in the drop-down list located at the top left corner and equipment data is displayed in the Data table. Next, choose the **Import** button from the **DATA MANAGER** toolbar, refer to Figure P-164; the **AutoCAD Plant** message box is displayed, refer to Figure P-165.



***Figure P-164** Choosing the **Import** button*

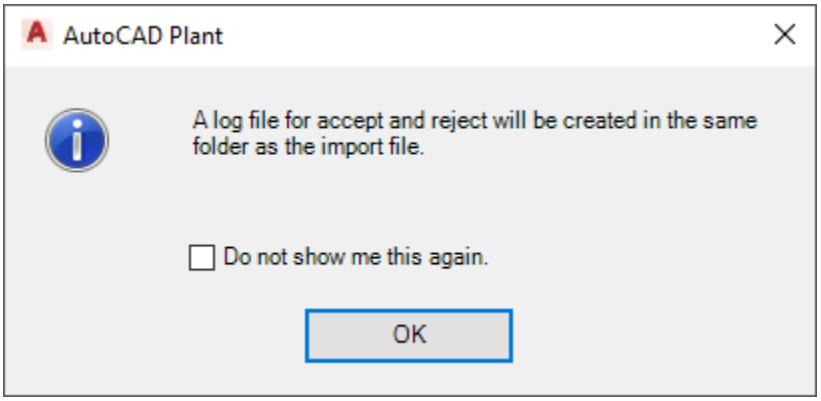

***Figure P-165** The **AutoCAD Plant** message box*

Next, choose the **OK** button from the **AutoCAD Plant** message box; the **Import From** dialog box is displayed, refer to Figure P-166.

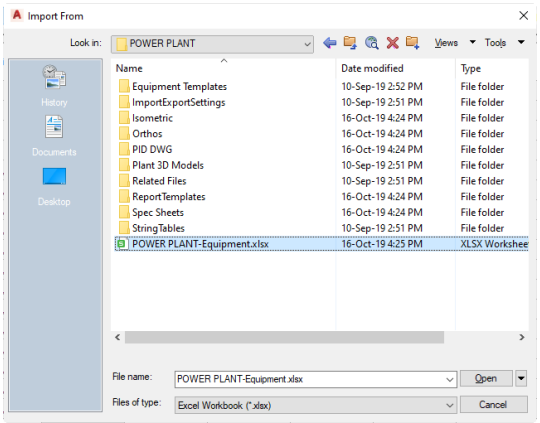

Figure P-166 *The* ***Import From*** *dialog box*

Next, browse to the location C:\Users\User_name\Documents\POWER PLANT and open the **POWER PLANT- Equipment.xlsx** file; the **Import Data** dialog box is displayed, refer to Figure P-167.

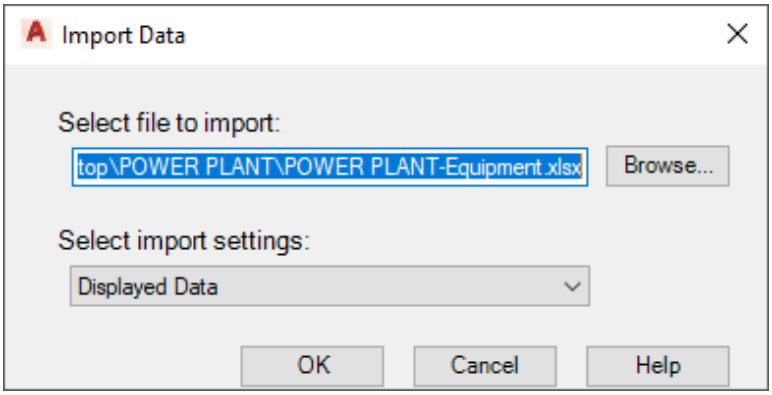

Figure P-167 *The* ***Import Data*** *dialog box*

Next, choose the **OK** button from the **Import Data** dialog box; the data in the excel file is imported into the **DATA MANAGER**, refer to Figure P-168.

	Area	Long Description (Size)	Manufacturer	Compatible Standard	Content Iso Symbol Definition	Design Pressure Factor
		Turbine				

Figure P-168 *The Data Table after importing the data*

After importing the data into the **DATA MANAGER**, choose the **Accept All** button from the **DATA MANAGER** toolbar to accept the changes made to the data, refer to Figure P-169, and then exit the **DATA MANAGER**.



Figure P-169 *Choosing the* ***Accept All*** *button*

Next, choose the **Save** button from the **Application** menu and then the **Close** button to close the file.

Using Autodesk AutoCAD Plant Report Creator and Generating Reports

Now, you will be using **Autodesk AutoCAD Plant Report Creator** to generate reports. To do so, double-click on the shortcut icon of **AutoCAD Plant Report Creator 2021 - English** available on your desktop; the **Autodesk AutoCAD Plant Report Creator** will be displayed, refer to Figure P-170.

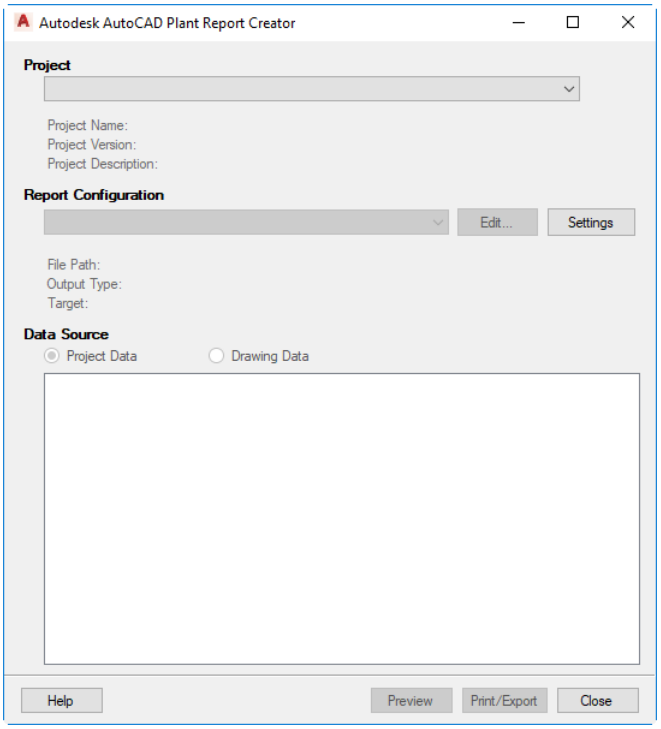

Figure P-170 The Autodesk AutoCAD Plant Report Creator

In **Autodesk AutoCAD Plant Report Creator**, select the **Open** option from the **Project** drop-down list; the **Open** dialog box will be displayed. Next, browse to the location C:\Users\User_name\Documents\POWER PLANT and double-click on the **Project.xml** file; the data sources related to the **POWER PLANT** project will be displayed in the **Autodesk AutoCAD Plant Report Creator**. Select the **3D Parts** option from the **Report Configuration** drop-down list and select the **Project Data** radio button from the **Data Source** area, if not already selected. Next, choose the **Print/Export** button from **Autodesk AutoCAD Plant Report Creator**; the **PDF Export Options** dialog box will be displayed. In this dialog box, enter the values in different text boxes as shown in Figure P-171 and then choose the **OK** button; the report will be exported in the PDF file format and the **Export results** window will be displayed, refer to Figure P-172.

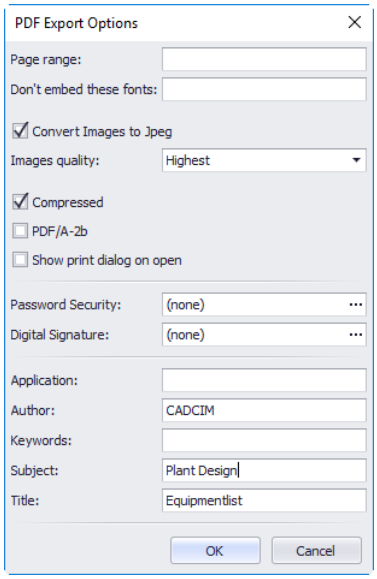

Figure P-171 *The* ***PDF Export Options dialog box***

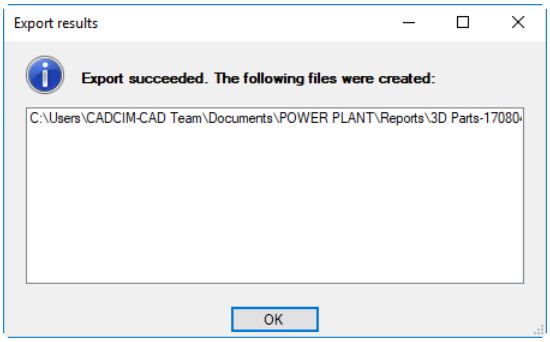

Figure P-172 *The* ***Export Results*** *window*

In this window, double-click on the file path; the PDF file containing the 3D Parts report will be displayed, refer to Figures P-173 and P-174.

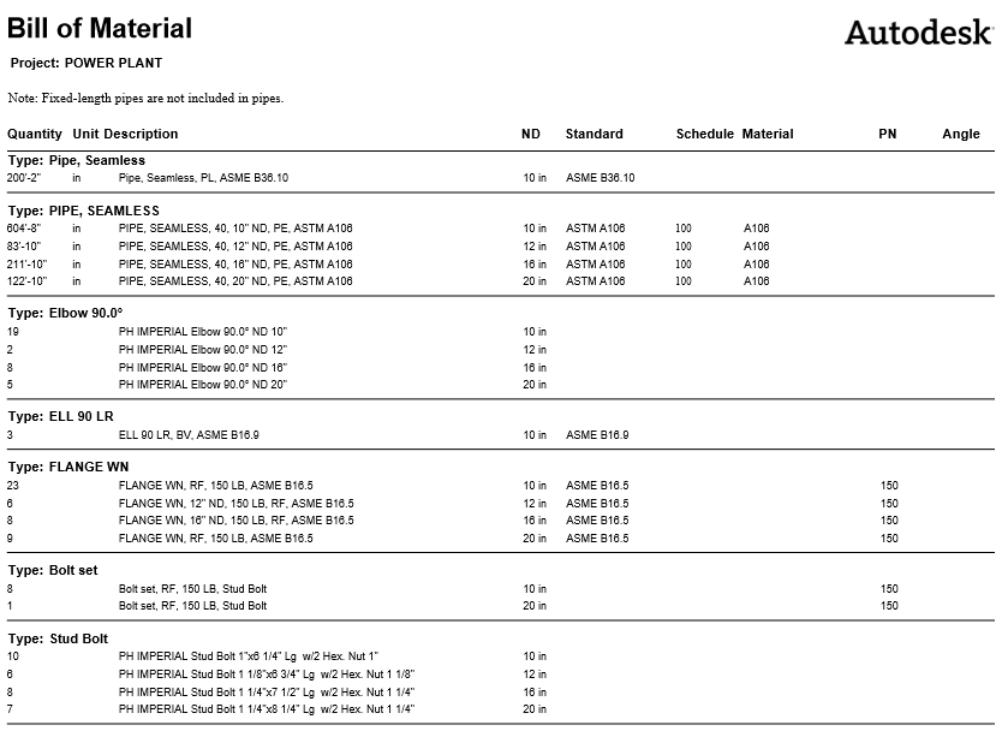

Bill of Material

Autodesk

Project: POWER PLANT

Note: Fixed-length pipes are not included in pipes.

Quantity	Unit	Description	ND	Standard	Schedule	Material	PN	Angle
Type: Pipe, Seamless								
200'-2"	in	Pipe, Seamless, PL, ASME B36.10	10 in	ASME B36.10				
Type: PIPE, SEAMLESS								
604'-8"	in	PIPE, SEAMLESS, 40, 10" ND, PE, ASTM A106	10 in	ASTM A106	100	A106		
83'-10"	in	PIPE, SEAMLESS, 40, 12" ND, PE, ASTM A106	12 in	ASTM A106	100	A106		
211'-10"	in	PIPE, SEAMLESS, 40, 16" ND, PE, ASTM A106	16 in	ASTM A106	100	A106		
122'-10"	in	PIPE, SEAMLESS, 40, 20" ND, PE, ASTM A106	20 in	ASTM A106	100	A106		
Type: Elbow 90.0°								
19		PH IMPERIAL Elbow 90.0° ND 10"	10 in					
2		PH IMPERIAL Elbow 90.0° ND 12"	12 in					
8		PH IMPERIAL Elbow 90.0° ND 16"	16 in					
5		PH IMPERIAL Elbow 90.0° ND 20"	20 in					
Type: ELL 90 LR								
3		ELL 90 LR, BV, ASME B16.9	10 in	ASME B16.9				
Type: FLANGE WN								
23		FLANGE WN, RF, 150 LB, ASME B16.5	10 in	ASME B16.5			150	
6		FLANGE WN, 12" ND, 150 LB, RF, ASME B16.5	12 in	ASME B16.5			150	
8		FLANGE WN, 16" ND, 150 LB, RF, ASME B16.5	16 in	ASME B16.5			150	
9		FLANGE WN, RF, 150 LB, ASME B16.5	20 in	ASME B16.5			150	
Type: Bolt set								
8		Bolt set, RF, 150 LB, Stud Bolt	10 in				150	
1		Bolt set, RF, 150 LB, Stud Bolt	20 in				150	
Type: Stud Bolt								
10		PH IMPERIAL Stud Bolt 1"x6 1/4" Lg w/2 Hex. Nut 1"	10 in					
6		PH IMPERIAL Stud Bolt 1 1/8"x6 3/4" Lg w/2 Hex. Nut 1 1/8"	12 in					
8		PH IMPERIAL Stud Bolt 1 1/4"x7 1/2" Lg w/2 Hex. Nut 1 1/4"	16 in					
7		PH IMPERIAL Stud Bolt 1 1/4"x8 1/4" Lg w/2 Hex. Nut 1 1/4"	20 in					

Figure P-173 *Page 1 of the 3D Parts report in PDF file*

Quantity	Unit	Description	ND	Standard	Schedule	Material	PN	Angle
Type: Gasket								
14		PH IMPERIAL Gasket ND 10"	10 in					
6		PH IMPERIAL Gasket ND 12"	12 in					
8		PH IMPERIAL Gasket ND 16"	16 in					
7		PH IMPERIAL Gasket ND 20"	20 in					
Type: Gasket, SWG								
8		GASKET, SWG, 10" ND, 1/8" THK, 150 LB, RF, ASME B16.20	10 in	ASME B16.20			150	
1		GASKET, SWG, 20" ND, 1/8" THK, 150 LB, RF, ASME B16.20	20 in	ASME B16.20			150	
Type: Control Valve, Ball								
2		CONTROL VALVE, BALL, 10" ND, 150 LB, RF, ISA 75.08.02, 11 69/100" LG	10 in	ISA 75.08.02			150	
Type: Gate Valve								
2		GATE VALVE, CONDUIT, 10" ND, 150 LB, RF, ASME B16.10, 13" LG	10 in	ASME B16.10			150	
1		GATE VALVE, CONDUIT, 20" ND, 150 LB, RF, ASME B16.10, 18" LG	20 in	ASME B16.10			150	

Figure P-174 *Page 2 of the 3D Parts report in PDF file*

After viewing the report, close the PDF file. Next, choose the **OK** button from the **Export results** window and close **Autodesk AutoCAD Plant Report Creator**.